# UH-72A Cockpit Configuration

Outboard Strap-on Sensor
Displays
(S&S Configuration)

# *FA Hardware Overview: MIP/Center Console/Overhead*

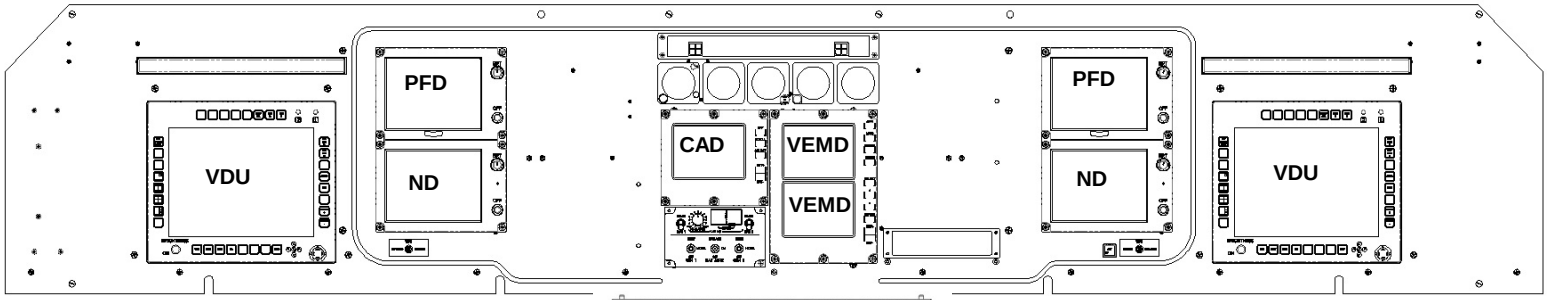


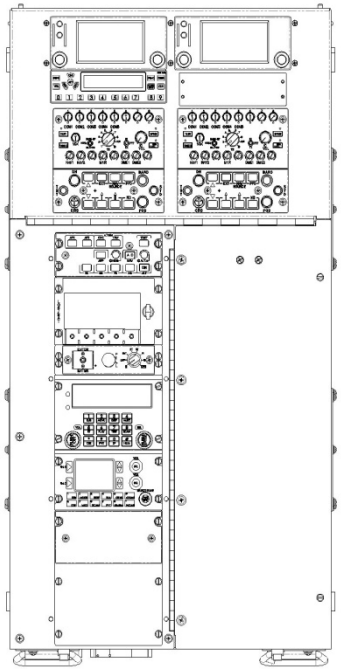

**Overhead**

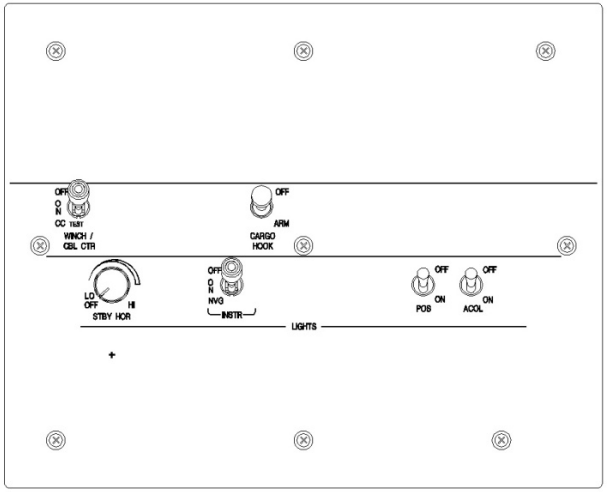


**Search Light**

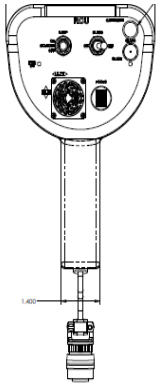

**MX15i**

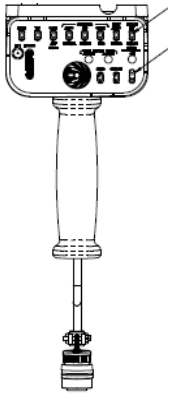

# FA Hardware Overview: MIP/Center Console

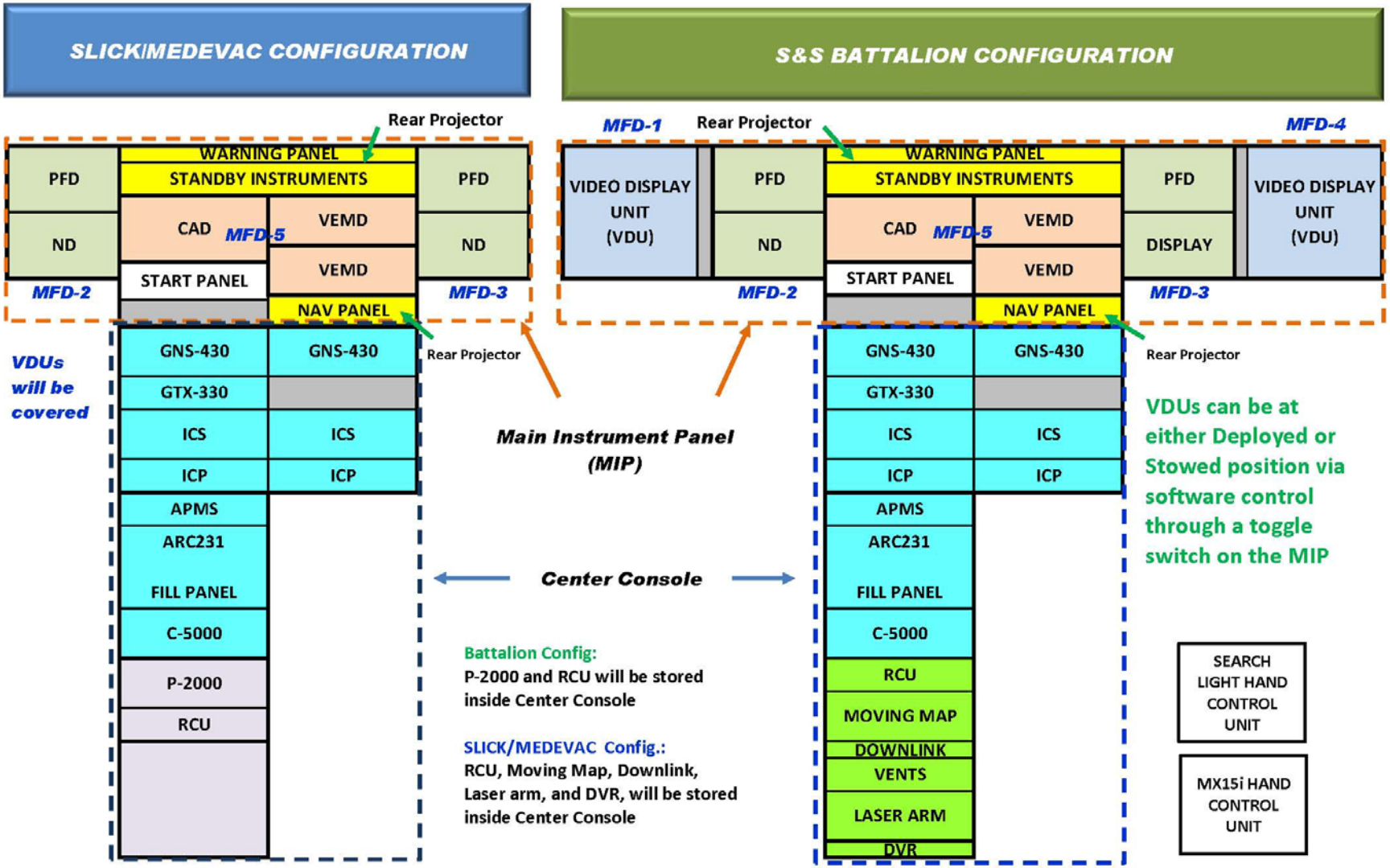

# FA: Main Instrument Panel

- Standard size & mounting per existing AVCATT

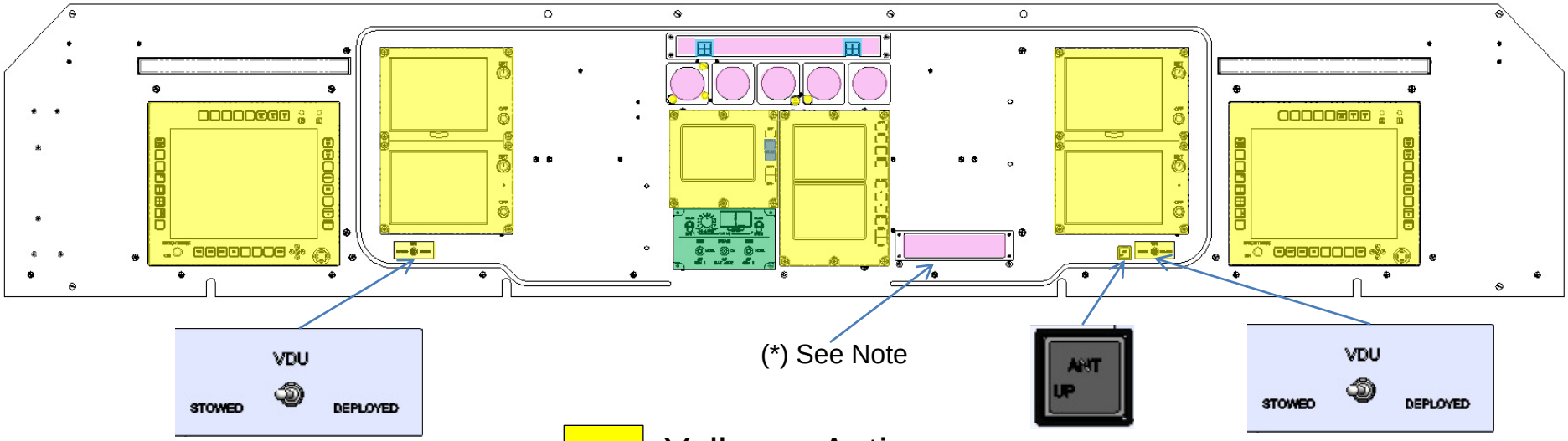


Yellow – Active
Green – Wallpaper
Blue – 3D Mockup
Purple – Projected

(*) Note: Nav Panel - MSG/WPT is projected and all required wallpapers are projected black.

# *MIP Structure Enhancement*

- Base Plate Stiffener added to reduce panel flexing

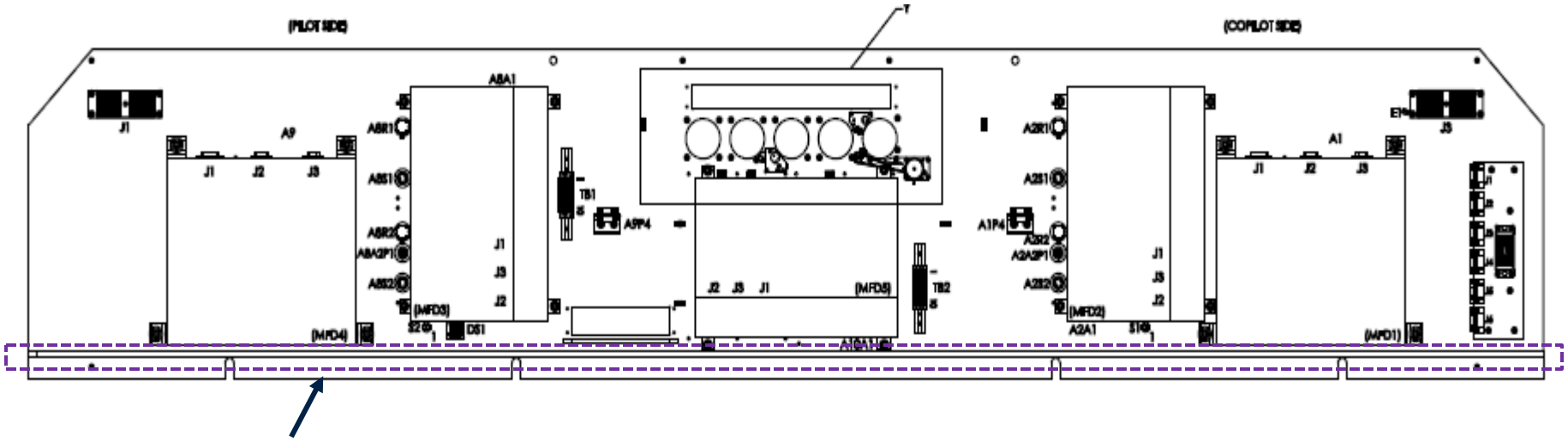


**Stiffener**

# *UH-72A MIP Projected Light Path Design Approach*

- Main Instrument Panel (MIP) Projected Light paths
  - Projected display seams fall between displays

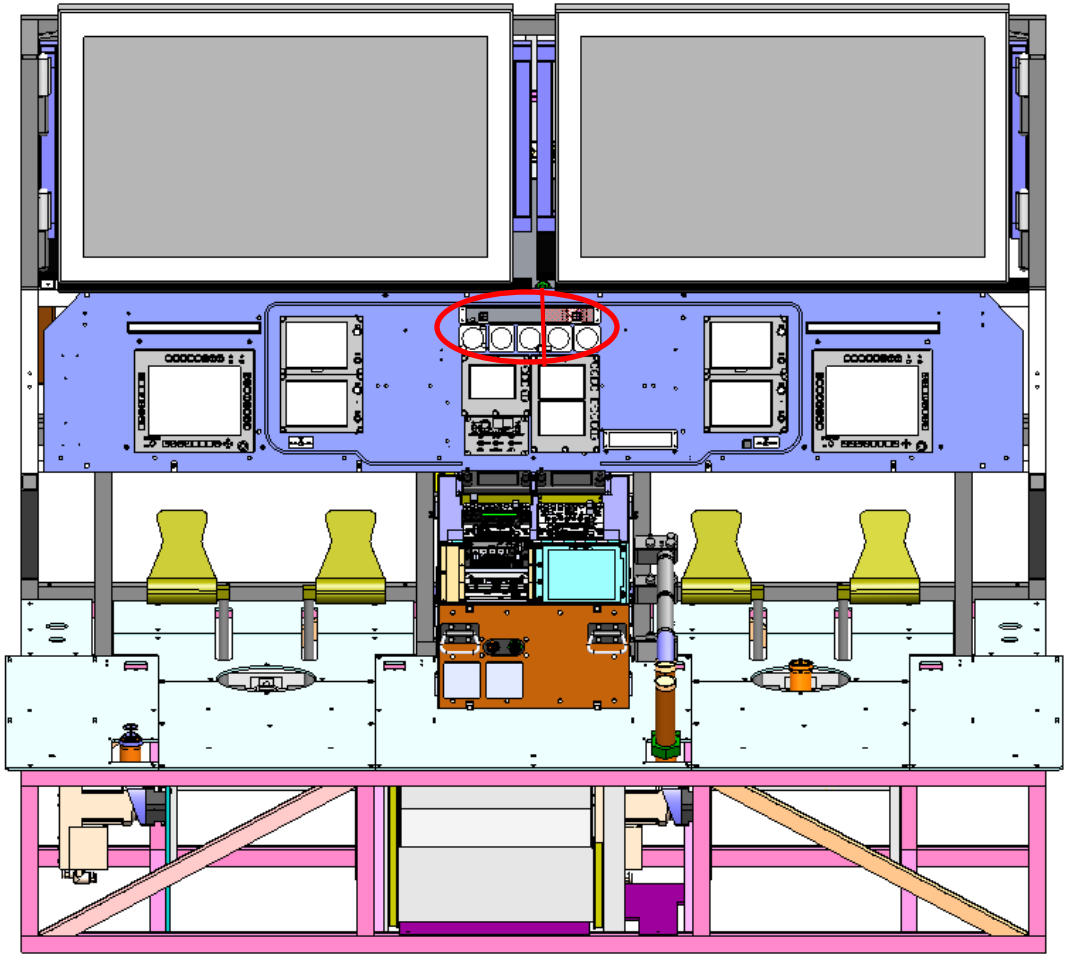

# FA: Center Console – Reconfigurable

- Security & Support (S&S) Configuration

BATTALION PANEL ASSY

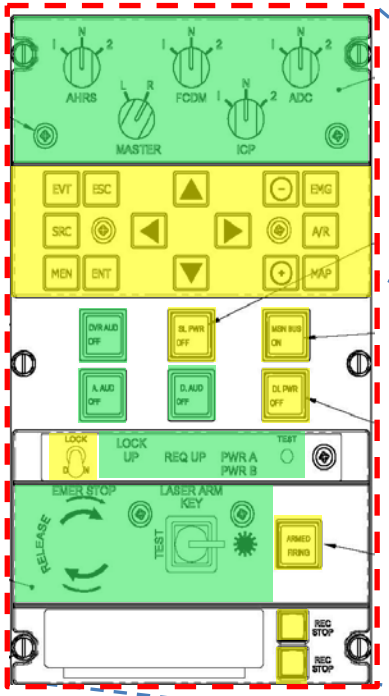


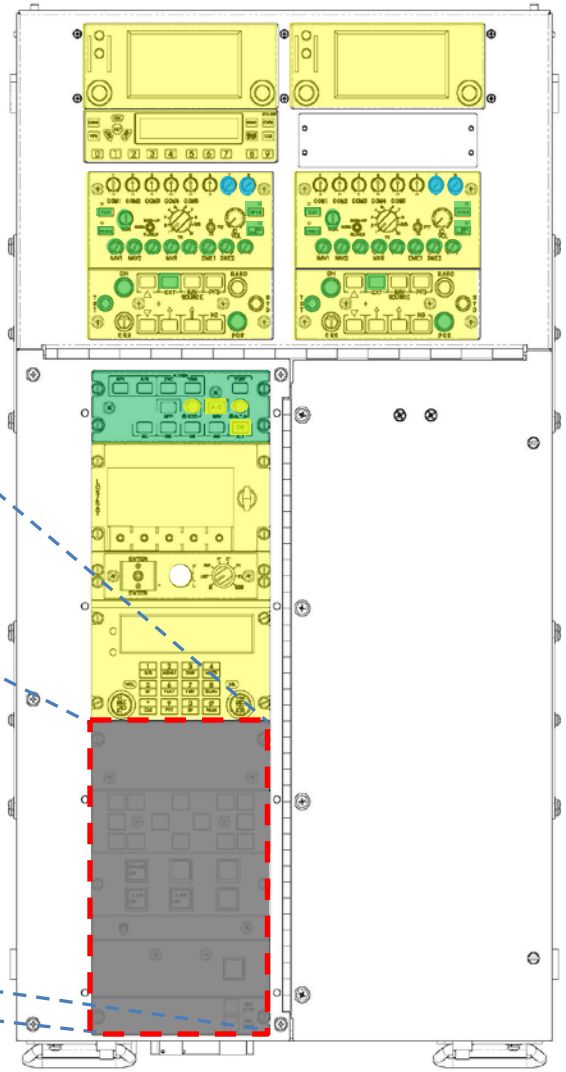

SEARCH LIGHT CTRL

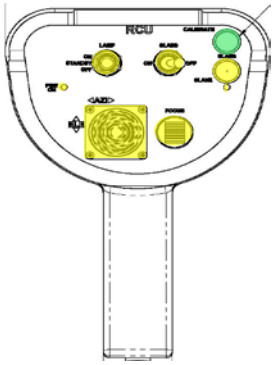


MX15i CAM CTRL

SIDE VIEW

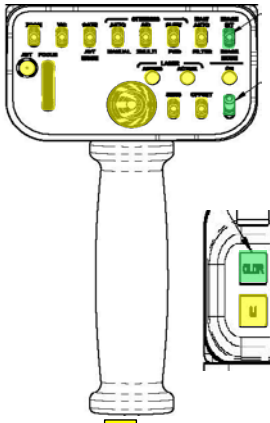

TOP VIEW

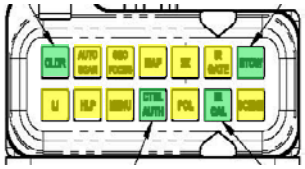

Yellow – Active
Green – Wallpaper
Blue – 3D Mockup
Purple – Projected

# FA: Center Console – Reconfigurable

- Standard (“Slick”) / MEDEVAC Configuration

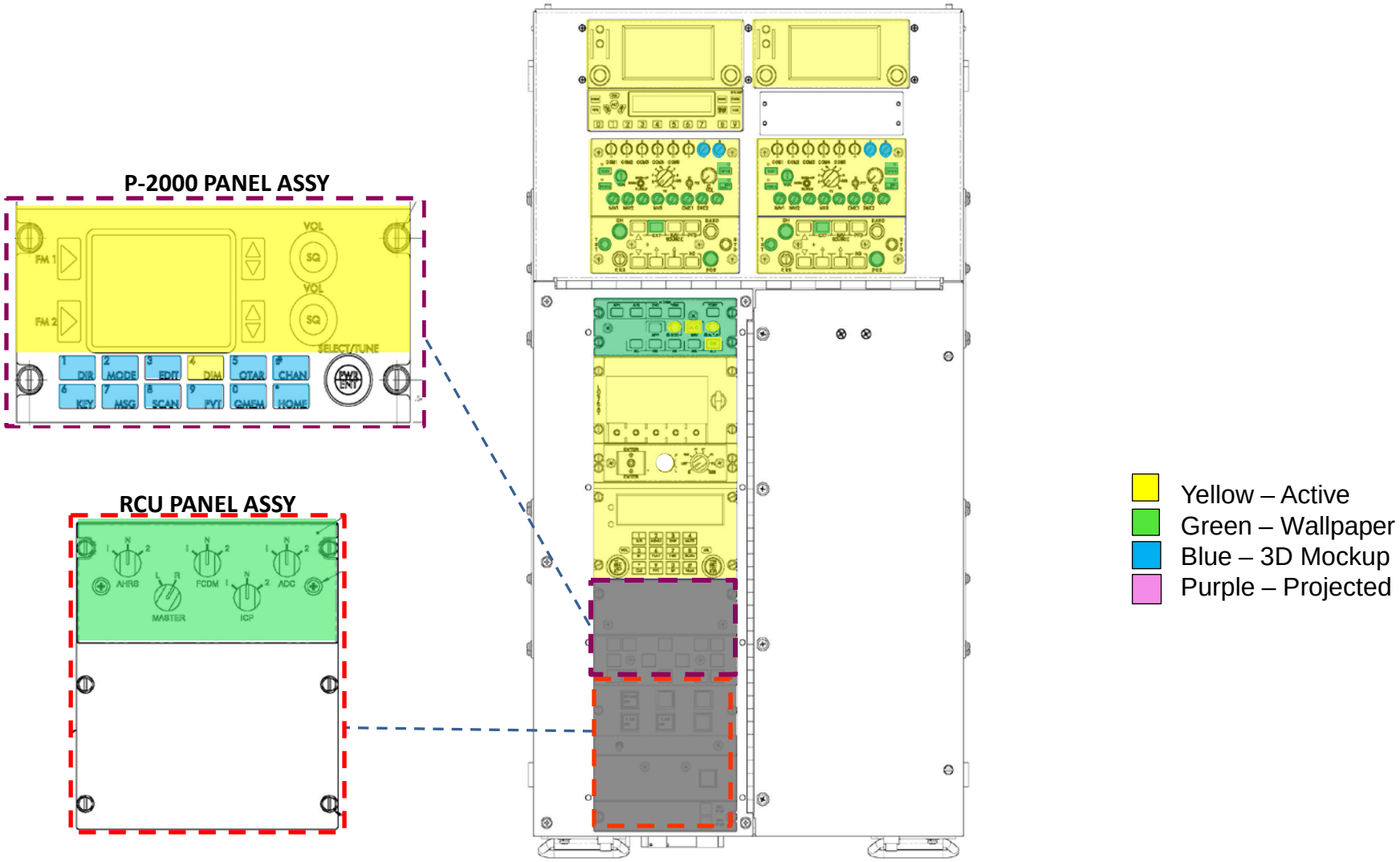

# *Center Console*

- Center Console interior storage areas

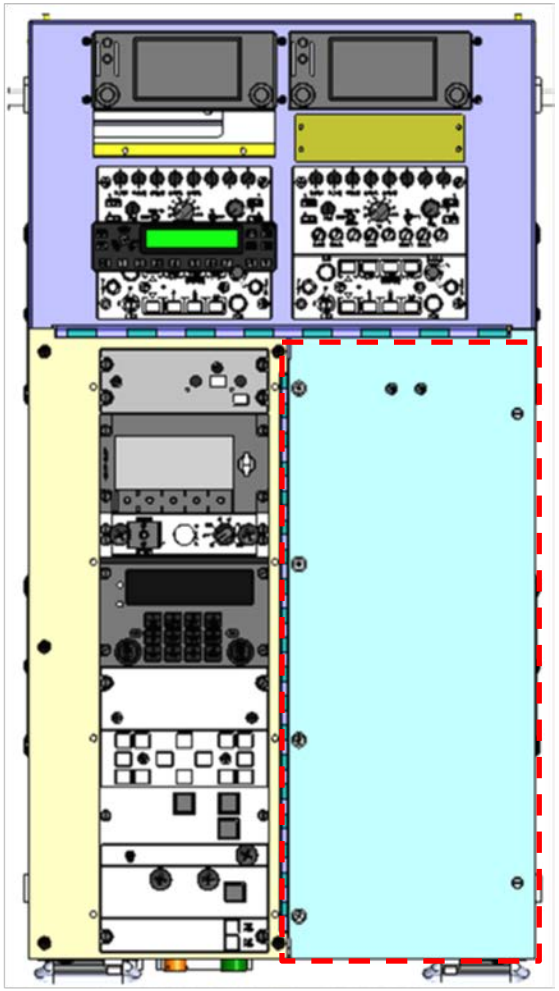

Storage bay:
Storage for
Sensor grips &
Collectives

Panel Storage Rack
Storage for configuration panels
that are not in use

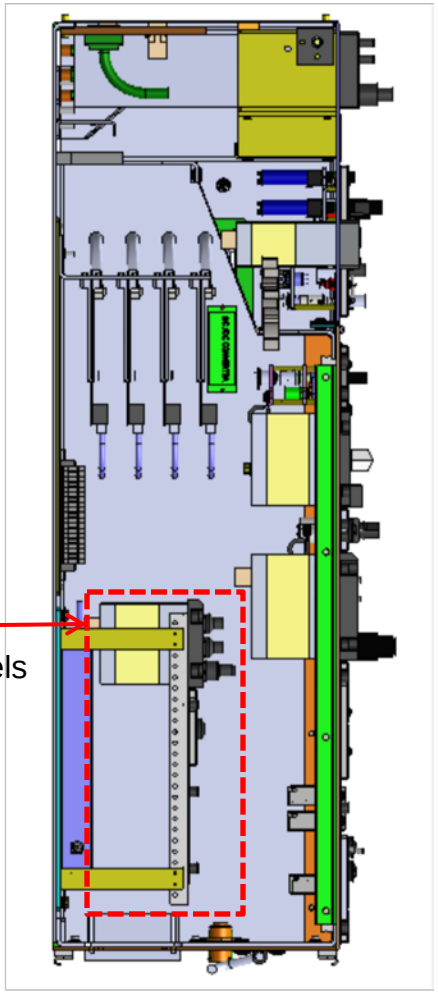

# *Center Console*

- Center Console Storage configuration
  - Open door to access searchlight and camera grips
  - Storage door is opened and fasten by knurl captive screws, to allow for tool-less access

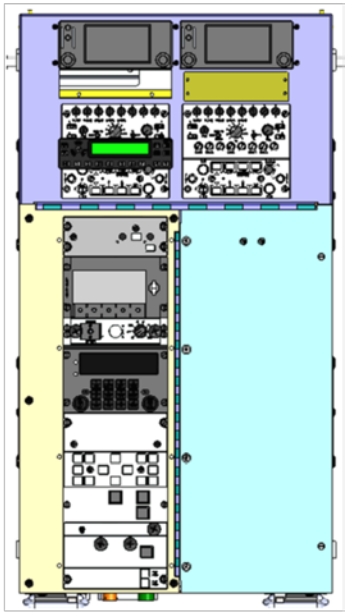

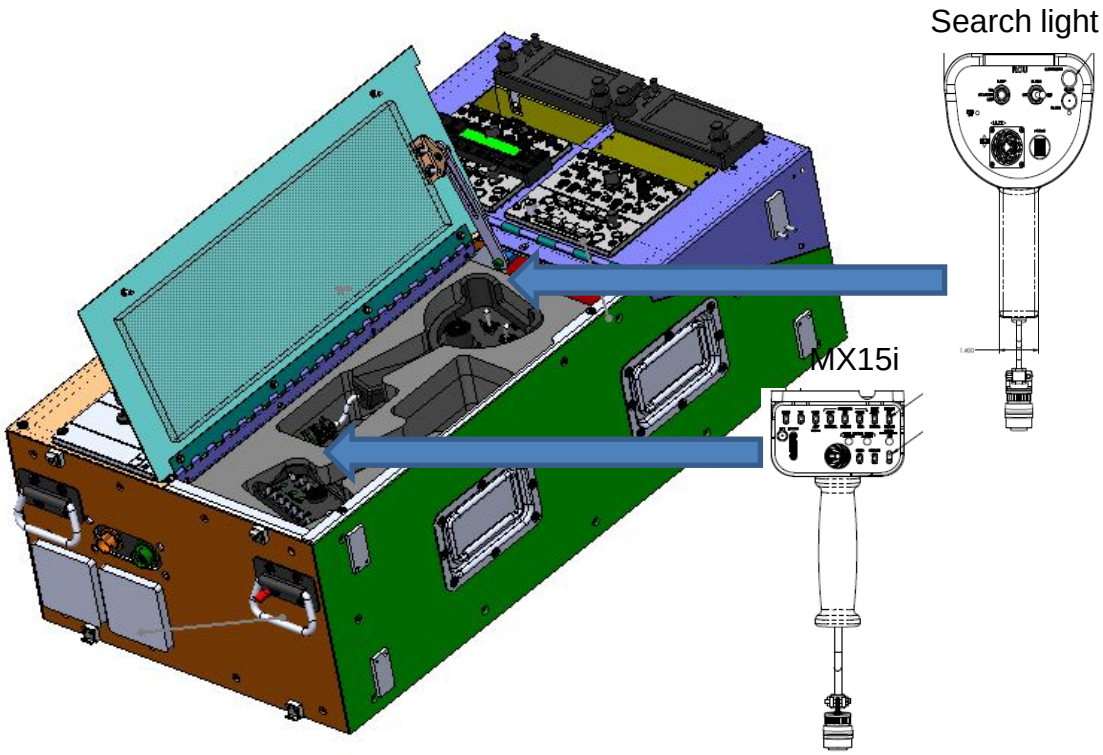

# *Center Console*

- Center Console Storage configuration
  - Remove grips and foam to access collectives.
    - (CONSOLE SHOWN WITH SIDE SECTIONED FOR CLARITY)
  - Cyclic's stored in AVCATT's existing Cyclic storage areas

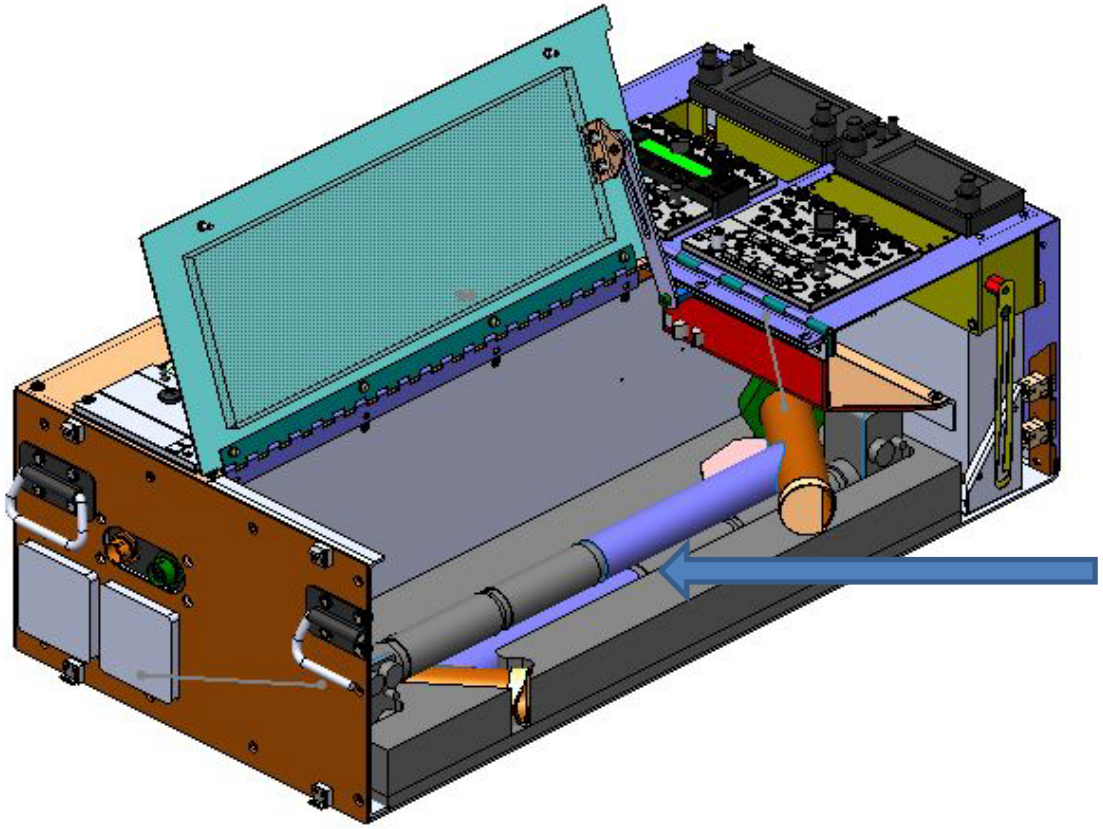

# *Center Console*

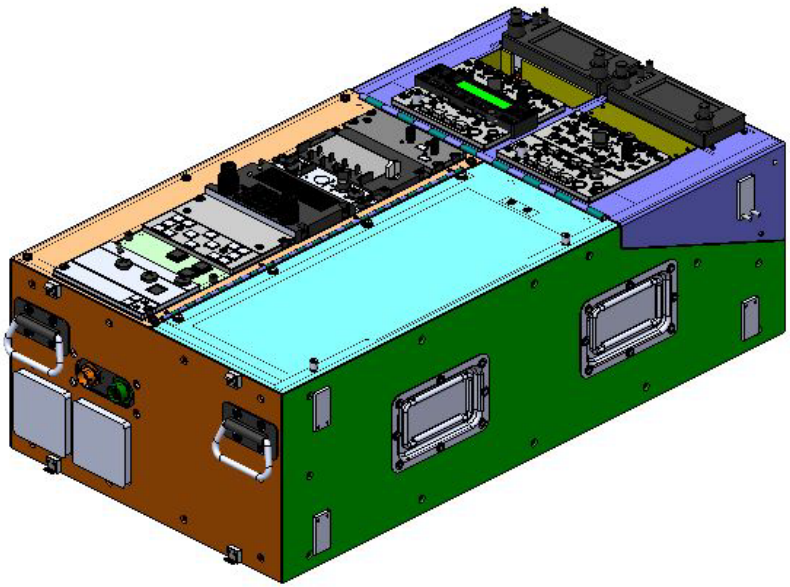

Canted Console folded flat for storage

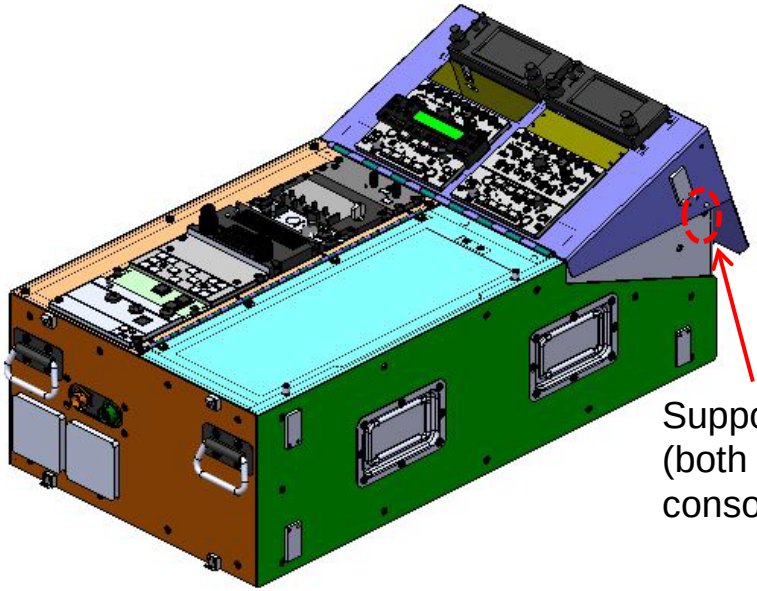

Support Bars (both sides of console)

Tilted to deployed position

Support arm's (both sides of console)

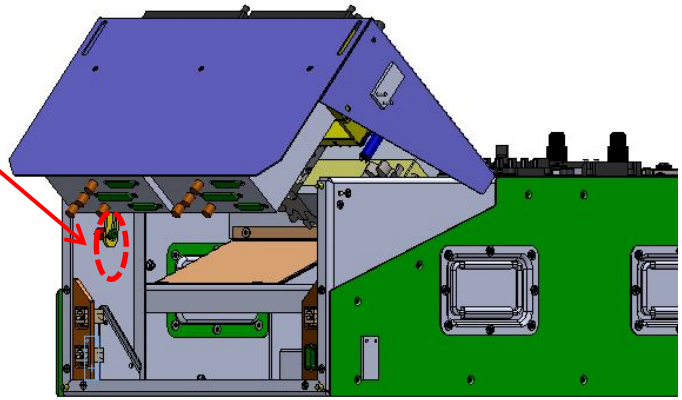

Additional high tilt lock position for maintenance

# *Center Console*

- Manned Module Center Console Storage
  Center Console will be secured by ratchet tie down straps for travel
  - No modification to the AVCATT infrastructure required

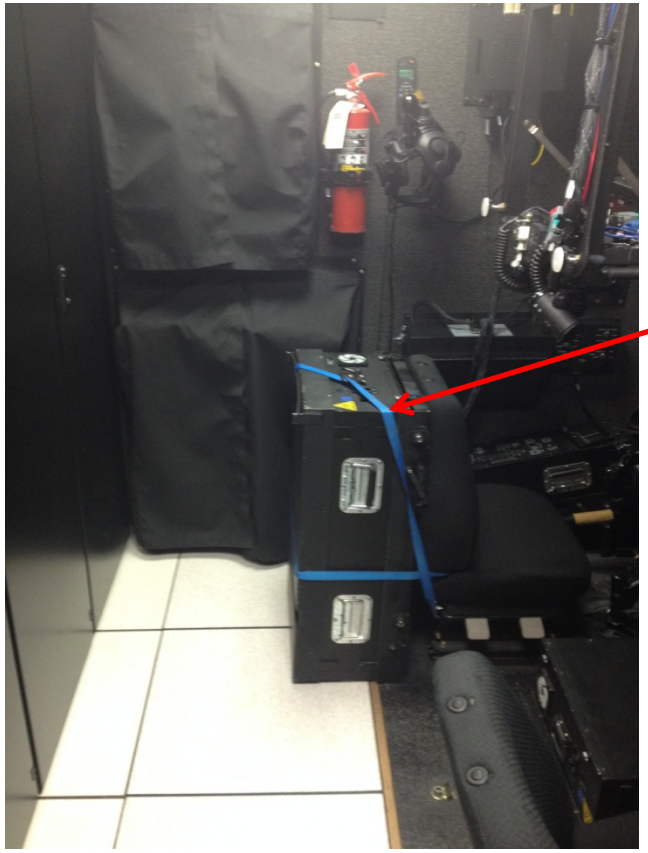

Tie down straps

# *Cyclic Storage*

- Room for additional 4 cyclics (2 configurations) per trailer
- No room for additional collective brackets necessitated for storage inside center consoles

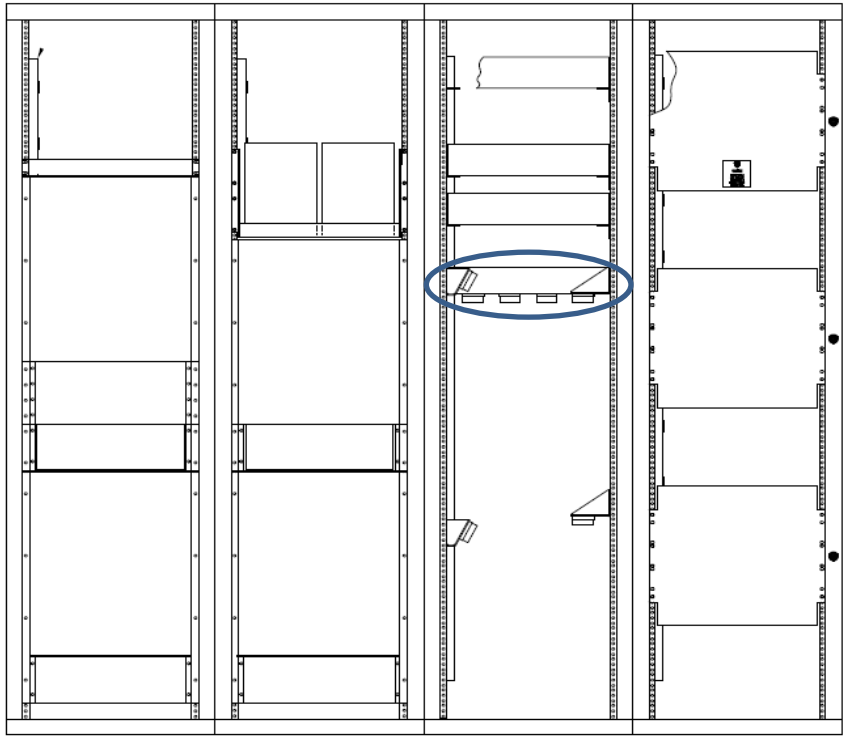

# Cyclic / Collective Sticks and Grips

| Control/Display Name | Ref | Hardware Fidelity Requirements | | | | | Comments |
|---|---|---|---|---|---|---|---|
| | | Not Simulated | Wallpaper Only | Tactile (3D Dummy) | Functional Fidelity | Physical Fidelity | |
| CYCLIC | | | | | | | |
| ICS/RADIO | 1 | | | | | X | |
| SAS ON | 2 | | | X | | | |
| SAS/AP CUT | 3 | | | X | | | |
| BEEP TRIM | 4 | | | | | X | |
| RESET | 5 | | | | | X | |
| FTR | 6 | | | | | X | |
| AP/MD DCPT | 7 | | | | | X | |
| CARGO REL | 8 | | | | | X | |
| Inactive | 9 | | | X | | | Add to FA |
| Inactive | 10 | | | X | | | Add to FA |

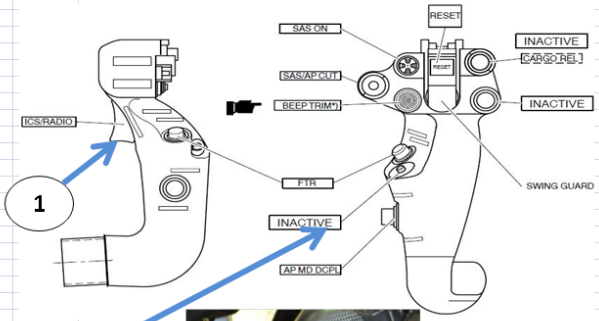

FA Change

# Cyclic / Collective Sticks and Grips

| Control/Display Name | | Hardware Fidelity Requirements | | | | | Comments |
|---|---|---|---|---|---|---|---|
| | | Not Simulated | Wallpaper Only | Tactile (3D Dummy) | Functional Fidelity | Physical Fidelity | |
| COLLECTIVE | Ref | | | | | | |
| EMER LATCH | 13 | | | X | | | (Formerly Not Simulated) |
| SAFETY BUTTON | A | X | | | | | No Change |
| TWIST GRIP ENG1 | 11 | | | X | | | No Change |
| TWIST GRIP ENG2 | 12 | | | X | | | No Change |
| MECH STOP | B | | | X | | | (Formerly Not Simulated) |
| SPRING LOADED PIN | C | X | | | | | Formerly Tactile, this is part of EMER LATCH functionality which is Tactile (above) |
| ENG TRIM SW | 8 | | | X | | | No Change |
| LANDING /SEARCH LIGHT | 3 | | | | | X | No Change |
| LIGHT CONTROL | 4 | | | | | X | (Previously called LIGHT FOCUS in FA) |
| GO AROUND | 2 | | | X | | | No Change |
| WIPER | 6 | | X | | | | (Formerly Not Simulated) |
| CUT CABLE | 1 | | | | | X | Pilot Only |
| HOOK RELEASE | 14 | | | | X | | Same as Emergency Release Handle, will not be identical to that of the aircraft |
| ENG TRIM | D | NA | NA | NA | NA | NA | NA, Duplicate of ENG TRIM SW above. |
| Inactive | 5 | | | X | | | New FA requirement, not previously listed |
| Light Switch | 7 | | | | | X | New FA requirement, not previously listed |
| Bambi Dump | 9 | | | | | X | New FA requirement, not previously listed |
| L/S-LT DIM | 10 | | | X | | | New FA requirement, not previously listed |
| EWS | 11 | | | | | X | New FA requirement, not previously listed |
| Wire Harness Tube | NA | X | | | | | CPG Side, Clarification |
| Grounding Strap Hook | NA | X | | | | | Clarification |

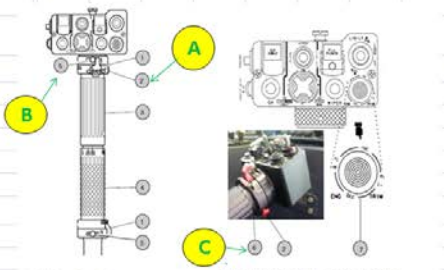


1 EMER safety latch
2 Safety button (ground idle stop function)
3 Twist grip ENG 1
4 Twist grip ENG 2
5 Mechanical stop for position FLIGHT (ground idle lock screw)
6 Spring-loaded pin
7 ENG TRIM sw (see description on the next page)

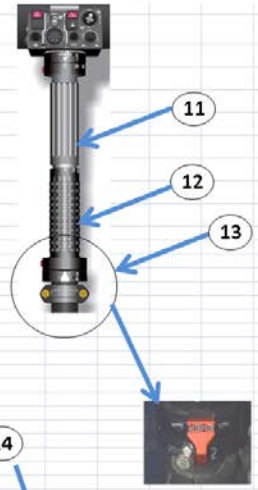


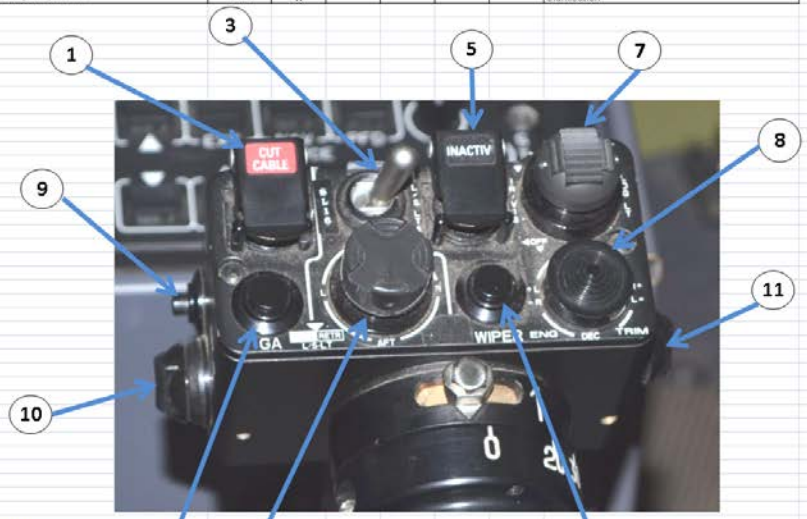

FA UPDATE

# FA: Overhead Panel

- Standard size & reconfigurable per modified overhead pan weldment

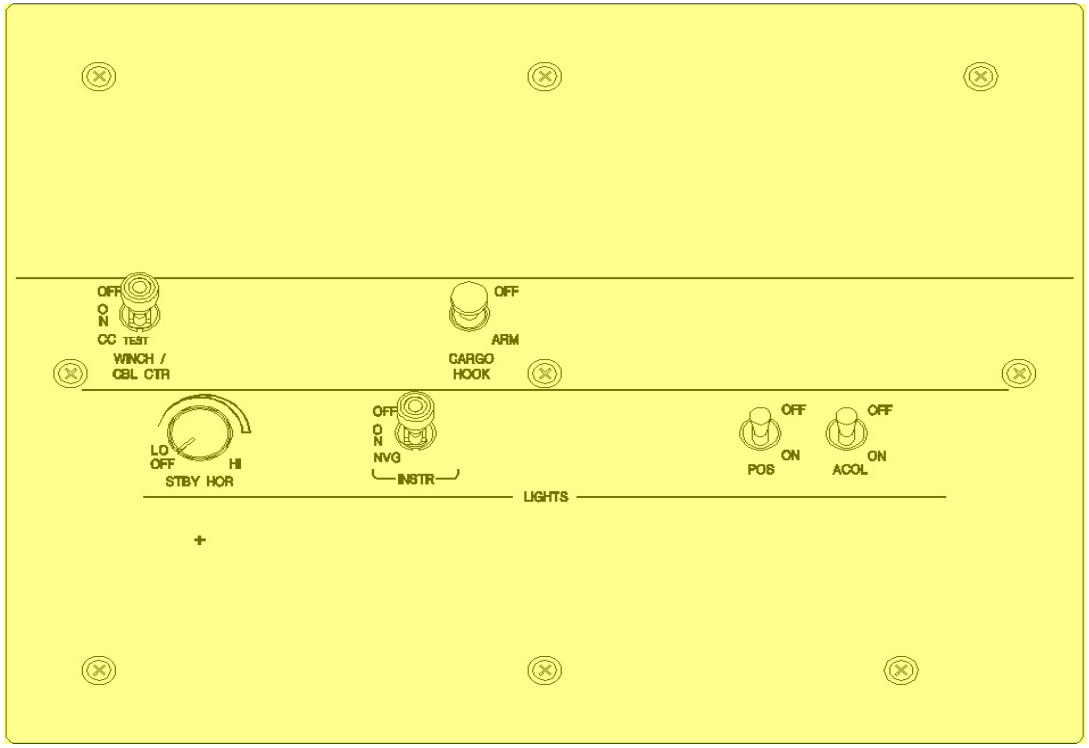


Yellow – Active
Green – Wallpaper
Blue – 3D Mockup
Purple – Projected

# *Concept of Operation – Overhead Panel*

- Overhead Panel reconfiguration
  - Cables disconnect from the back
  - Lever locks rotate to release overhead panel assembly
  - Panel assembly slides forward to drop guide pins through slots
  - Guide pins ride on Delrin® plastic guides
  - Does not require tools

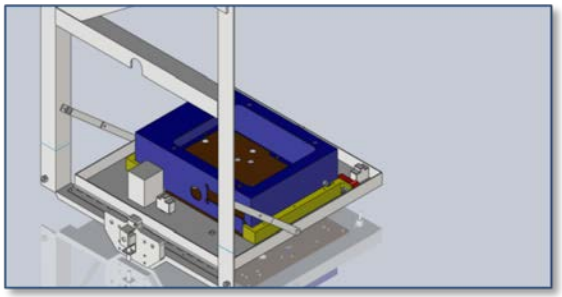
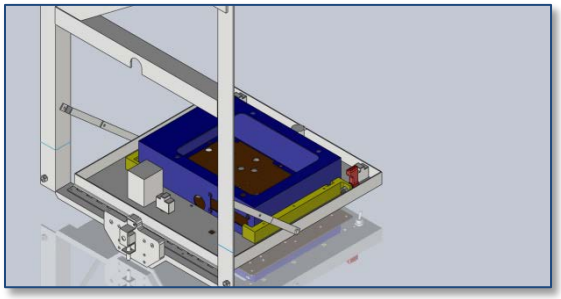
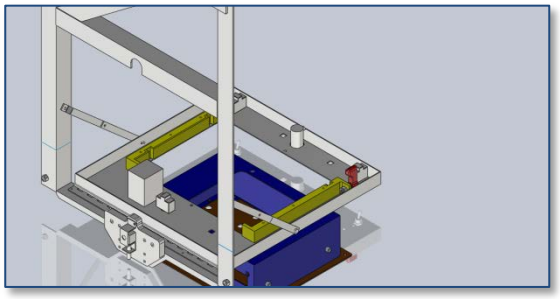

# *Overhead Storage*

- COTS shipping case will be provided for each overhead console
  - AVCATT Manned Module will not be modified
  - Portable case will be utilized
  - Case will travel with the UH-72 configuration. If the kit is shipped to another site, so is the storage.

# Electrical Interfaces

# *MIP FIO Distribution*

- 3 Multi-Function Displays (MFDs) – MFD 2, 3, and 5 only
  - Each MFD Bezel controlled via FIO
  - Standard FIO digital I/O for MFD Bezel VID BRT, Scroll, and Select
  - 4 existing FIO Cards will be used for MIP I/O distribution
    - 2 Cards on Pilot Side
    - 2 Cards on Co-pilot Side

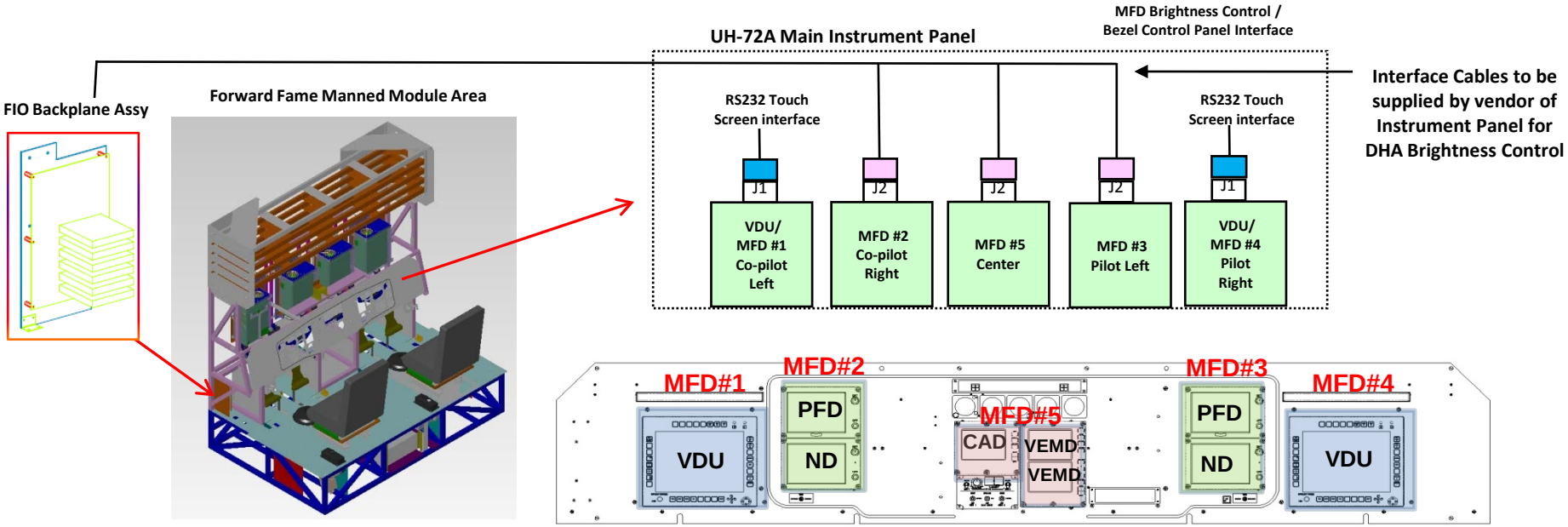

# MIP FIO Distribution

| | Preliminary I/O Count | | | |
|---|---|---|---|---|
| | Digital In/Out | Lamp Out | Analog In | Analog Out |
| 3 MFD's | 20 | 4 | 8 | 3 |
| CLOCK | 2 | 0 | 2 | 0 |
| PULL TO CAGE | 1 | 0 | 1 | 0 |
| BARO | 0 | 0 | 1 | 0 |
| CPLT VDU STOW/DP SW | 1 | 0 | 0 | 0 |
| PLT VDU STOW/DP SW | 1 | 0 | 0 | 0 |
| ANT UP/DN | 0 | 3 | 0 | 0 |
| MIP Configruation ID | 1 | 0 | 0 | 0 |
| Total | 26 | 7 | 12 | 3 |
| 4 CARD FIO BUDGET | 128 | 64 | 32 | 16 |
| FIO CONSUMPTION: | 20.3% | 10.9% | 37.5% | 18.8% |
| Spare I/O Available | 80% | 89% | 63% | 81% |

- Yellow – Active
- Green – Wallpaper
- Blue – 3D Mockup
- Purple – Projected

**UH-72A MIP**

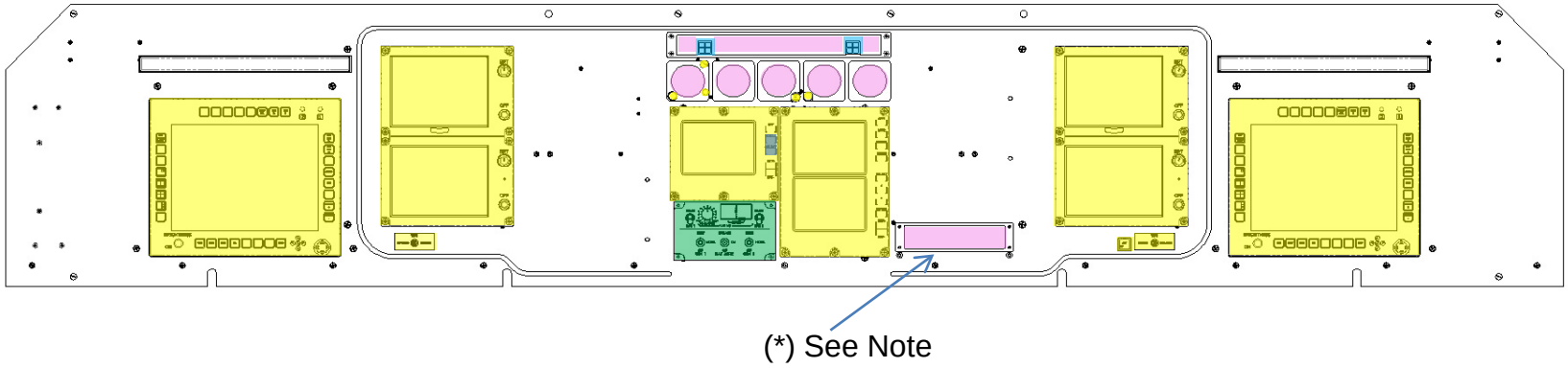


(*) Note: Nav Panel - MST/WPT is projected and all required wallpapers are projected black.

# *MIP Touch Screen Interface*

- 2 Video Display Units (VDUs) – MFD 1 and 4 Only
  - Each VDU display dimming, bezel lighting & buttons, and touch screen controlled via single RS-232 serial connection
  - Each VDU has Resistive Touch Screen
    - Input method: Finger, gloved hand, or stylus activation

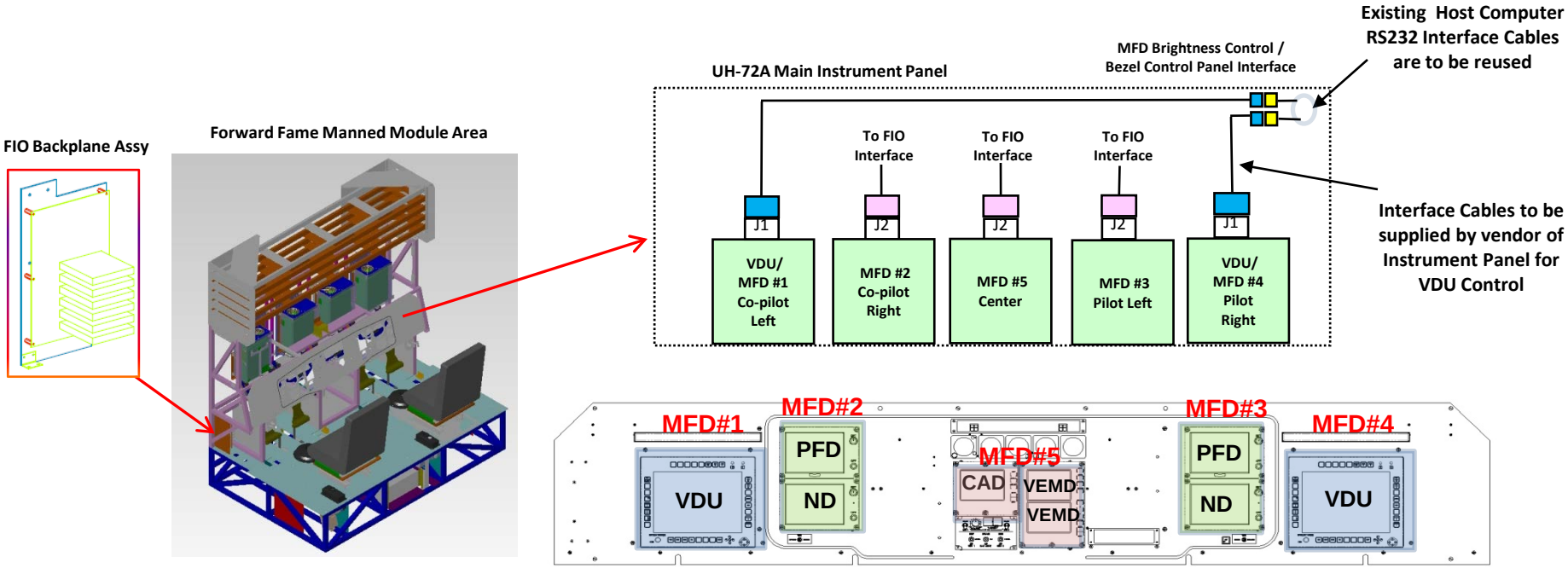

# MIP Touch Screen Interface

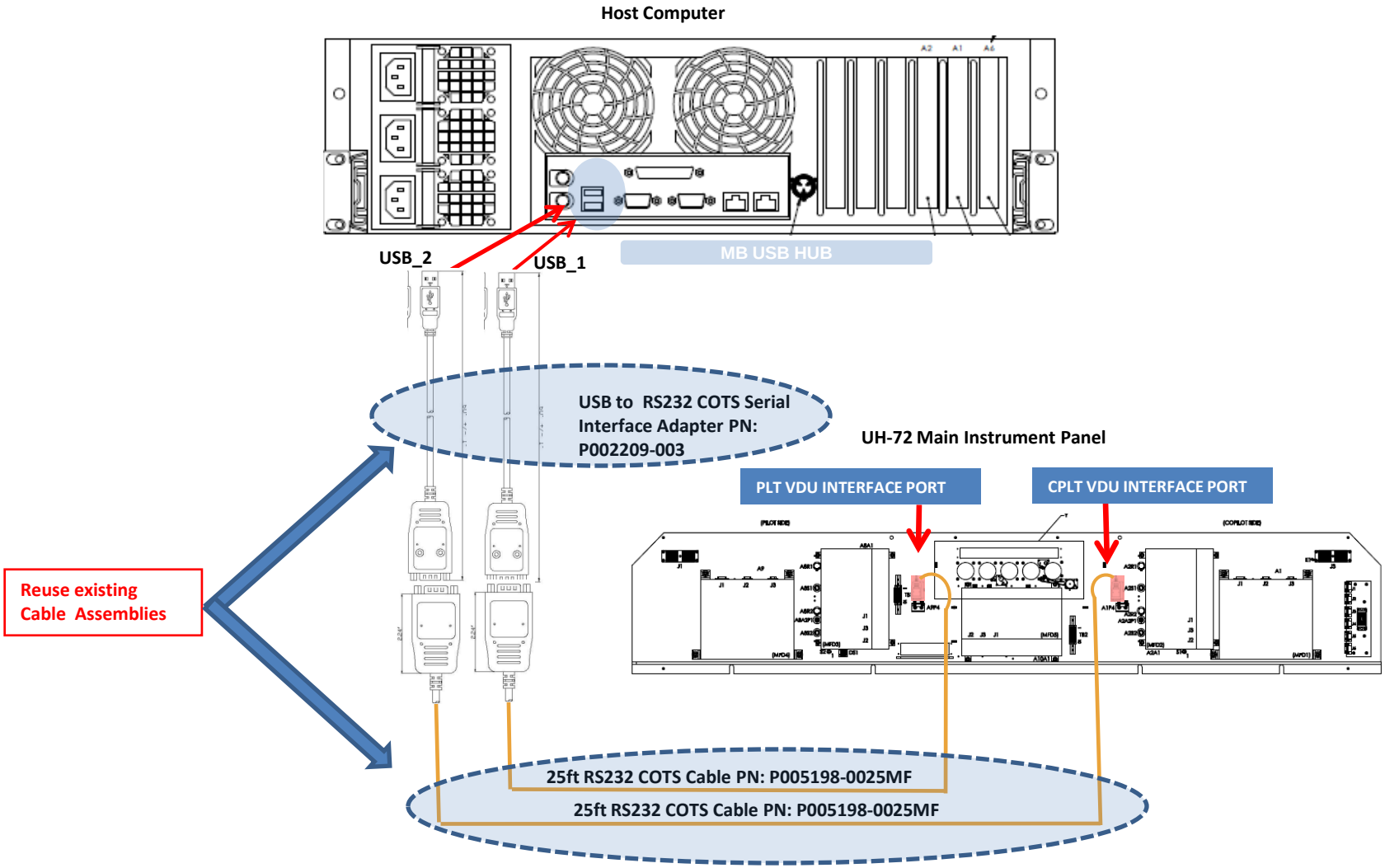

# MIP Video Distribution

- VDU Video Format (MFD 1 & 4 only)
  - XGA, 1024 x 768
- MFD Video Format
  - WXGA, 1280 x 800
- MFD Power and Video Input Connector (J1) or (J2 -VDU)
  - Standard VGA Video Input
  - +15 VDC and ground
  - Mini 15 pin “D” socket Connector
- MFD Video Interface cables
  - 5 VGA plug to VGA plug cables
  - Cable lengths vary

**Link’s Existing Configuration**

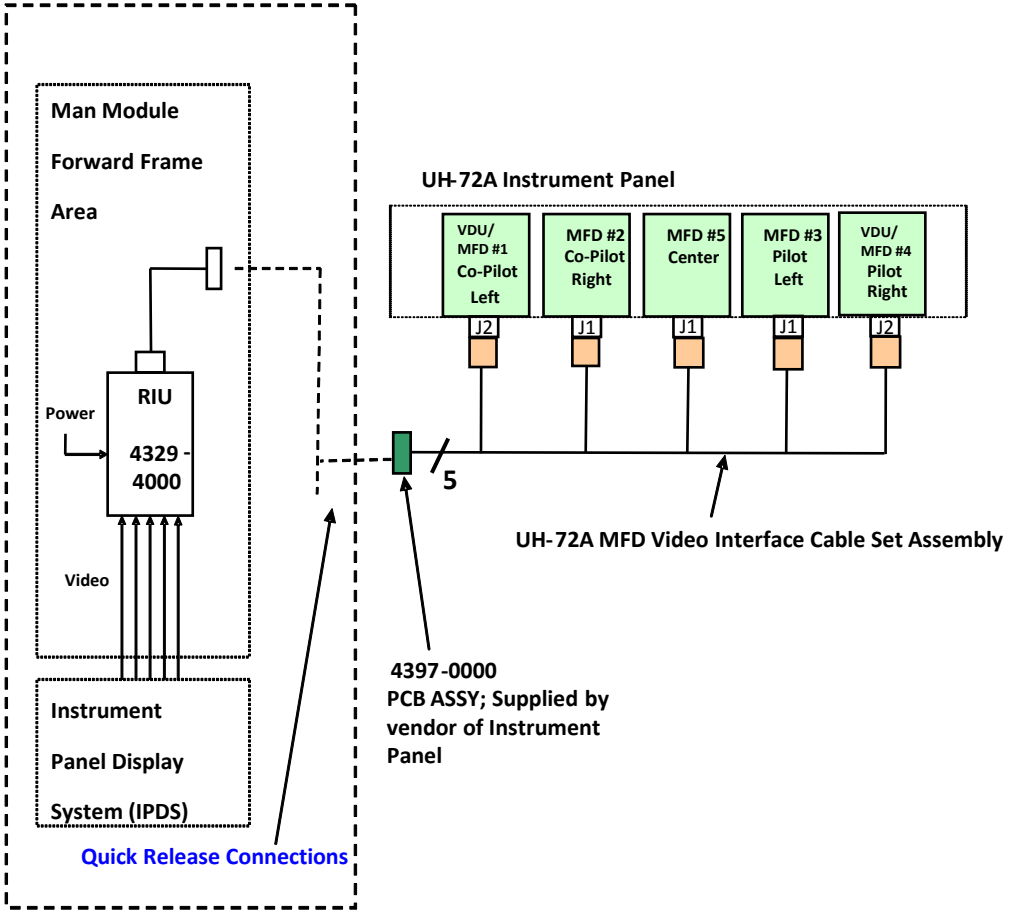

# *Instrument Panel Displays*

- MFD 2,3, and 5
  - Wide Viewing Angle for both Portrait and Landscape modes.
    - Key Features include:
      - Resolution: 1280 (H) x 800 (V) pixels
      - Viewable Area: 6.425 (H) x 10.280 (V) inches
      - Viewing Angle: (CR ≥ 10:1): ±80º (H), ±80º (V)
    - Pixel Density: 120 PPI

- MFD 1 and 4
  - Key Features include:
    - Resolution: 1024 (H) x 768 (V) pixels
    - Viewable Area: 8.284 (H) x 6.214 (V) inches
    - Viewing Angle: (CR ≥ 10:1): ±80º (H), ±80º (V)
  - Pixel Density:120 PPI

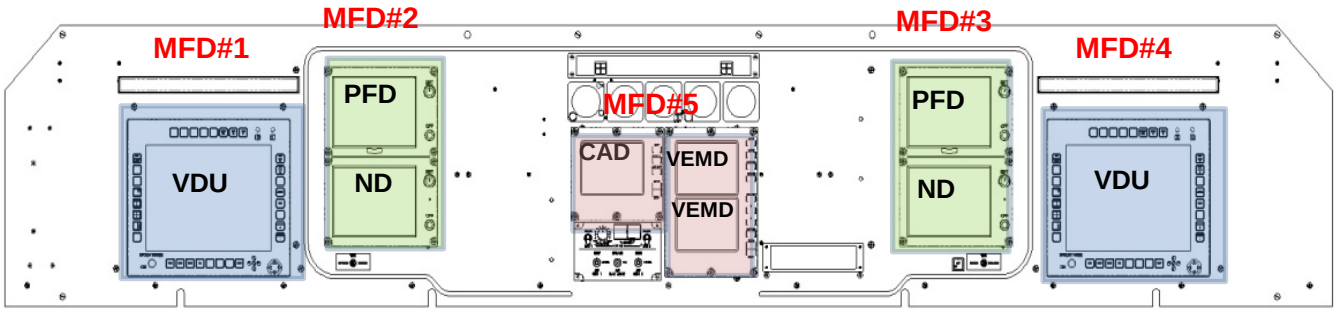

# Center Console FIO Distribution

- Individual panel assemblies
  - Garmin GNS430 (Qty 2)
  - Garmin GTX330
  - ARC-231
  - C-5000
  - P-2000
- FIO will control the bezel lighting for the subject panels
- Center Console will come with 4 FIO cards installed

**CPLT FIO Backplane Assy**

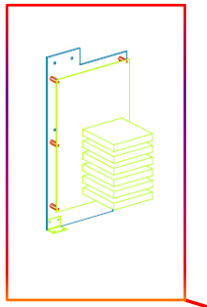

**Forward Fame Manned Module Area**

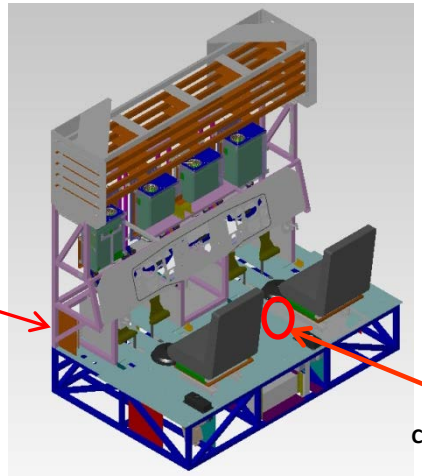

**Center Console Location**

**Link's Existing Configuration**

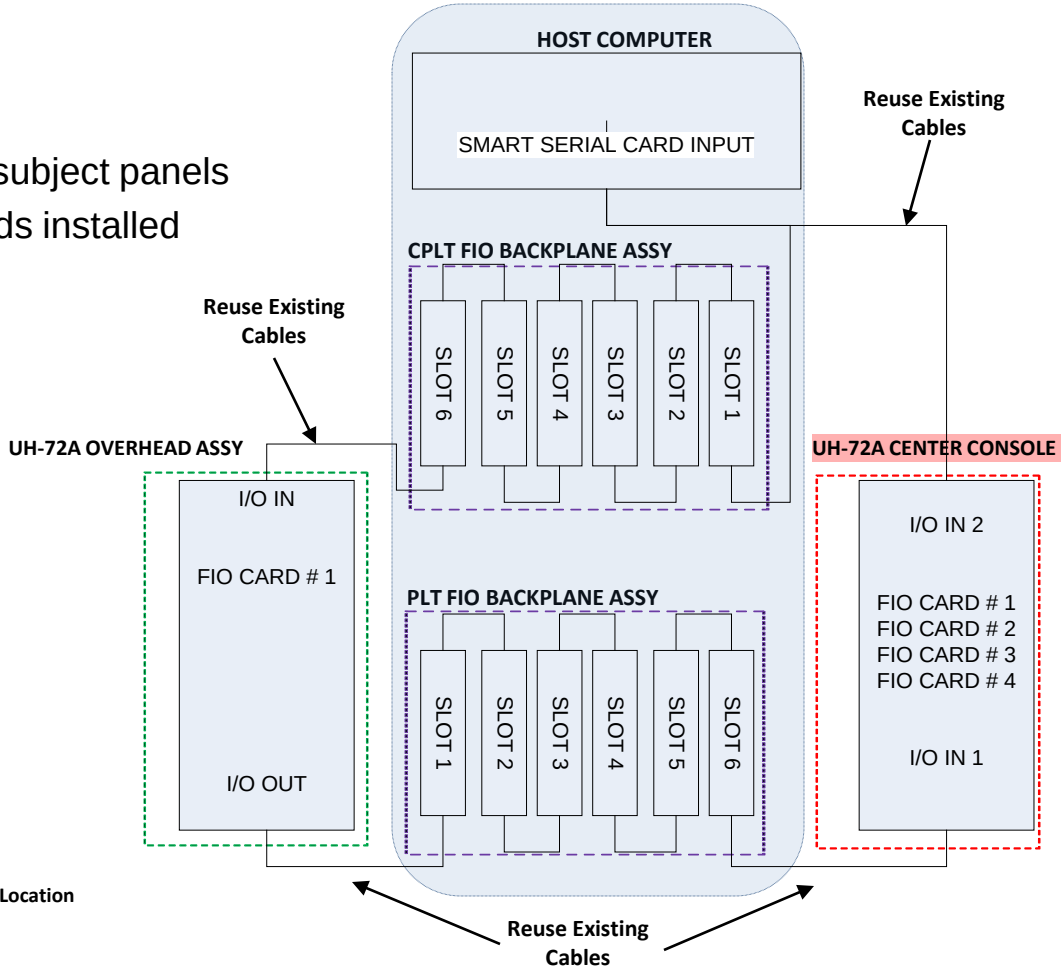

# Center Console FIO Distribution – SLICK

| | Preliminary I/O Count SLICK | | | |
|---|---|---|---|---|
| | Digital IO | Lamp Out | Analog In | Analog Out |
| CPLT ACU-6100 | 20 | 0 | 11 | 0 |
| PLT ACU-6100 | 20 | 0 | 11 | 0 |
| CPLT ICP (NAV DPLY CTRL PNL) | 12 | 1 | 1 | 0 |
| PLT ICP (NAV DPLY CTRL PNL) | 12 | 1 | 1 | 0 |
| APMS (AUTO PILOT CTRL) | 12 | 6 | 0 | 0 |
| ARC-231 FILL PANEL | 9 | 0 | 0 | 0 |
| CPLT GNS 430 | 0 | 0 | 0 | 1 |
| PLT GNS 430 | 0 | 0 | 0 | 1 |
| ARC-231 | 0 | 1 | 0 | 0 |
| GTX 330 | 0 | 1 | 0 | 0 |
| C-5000 | 0 | 1 | 0 | 0 |
| P-2000 | 0 | 1 | 0 | 0 |
| Center Console Config ID | 1 | 0 | 0 | 0 |
| Total | 86 | 12 | 24 | 2 |
| 4 CARD FIO BUDGET | 128 | 64 | 32 | 16 |
| FIO CONSUMPTION: | 67.2% | 18.8% | 75.0% | 12.5% |
| Spare I/O Available | 33% | 81% | 25% | 88% |

## UH-72A Canted/Center Console

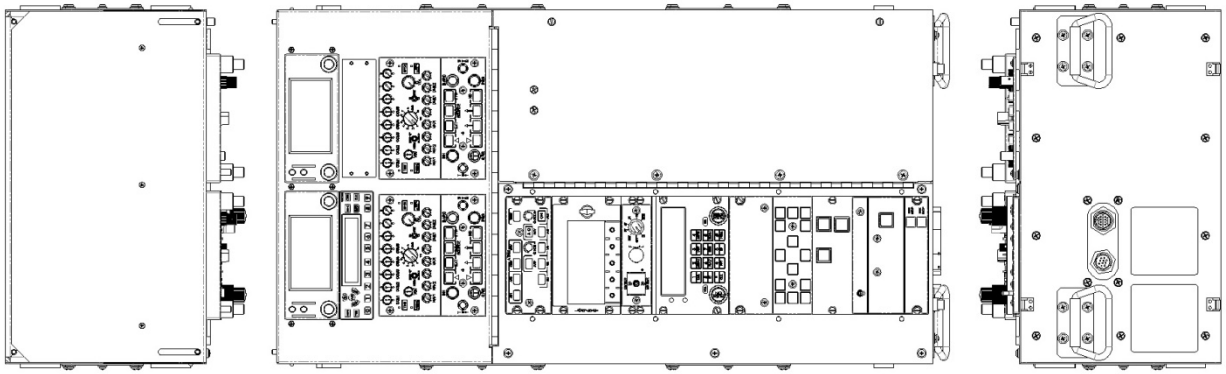

# Center Console FIO Distribution – S&S

| | Preliminary I/O Count S&S BATTALION | | | | |
|---|---|---|---|---|---|
| | Digital IO | Lamp Out | Analog In | Analog Out | RS232 |
| CPLT ACU-6100 | 20 | 0 | 11 | 0 | 0 |
| PLT ACU-6100 | 20 | 0 | 11 | 0 | 0 |
| CPLT ICP (NAV DPLY CTRL PNL) | 12 | 1 | 1 | 0 | 0 |
| PLT ICP (NAV DPLY CTRL PNL) | 12 | 1 | 1 | 0 | 0 |
| APMS (AUTO PILOT CTRL) | 12 | 6 | 0 | 0 | 0 |
| ARC-231 FILL PANEL | 9 | 0 | 0 | 0 | 0 |
| CPLT GNS 430 | 0 | 0 | 0 | 1 | 0 |
| PLT GNS 430 | 0 | 0 | 0 | 1 | 0 |
| ARC-231 | 0 | 1 | 0 | 0 | 0 |
| GTX 330 | 0 | 1 | 0 | 0 | 0 |
| C-5000 | 0 | 1 | 0 | 0 | 0 |
| MOVING MAP | 14 | 1 | 0 | 0 | 0 |
| MISSION CONTROL | 2 | 9 | 0 | 0 | 0 |
| DOWNLINK (LOCK/DOWN) | 2 | 0 | 0 | 0 | 0 |
| LASER ARM | 1 | 2 | 0 | 0 | 0 |
| DVR | 2 | 5 | 0 | 0 | 0 |
| SEARCH LIGHT HAND CTRL | 10 | 0 | 0 | 0 | 0 |
| MX15i CAM CTRL | 0 | 0 | 0 | 0 | 1 |
| Center Console Config ID | 1 | 0 | 0 | 0 | 0 |
| Total | 107 | 28 | 24 | 2 | 1 |
| 4 CARD FIO BUDGET | 128 | 64 | 32 | 16 | 4 |
| FIO CONSUMPTION: | 83.6% | 43.8% | 75.0% | 12.5% | 25.0% |
| Spare I/O Available | 16% | 56% | 25% | 88% | 75% |

## UH-72A Canted/Center Console

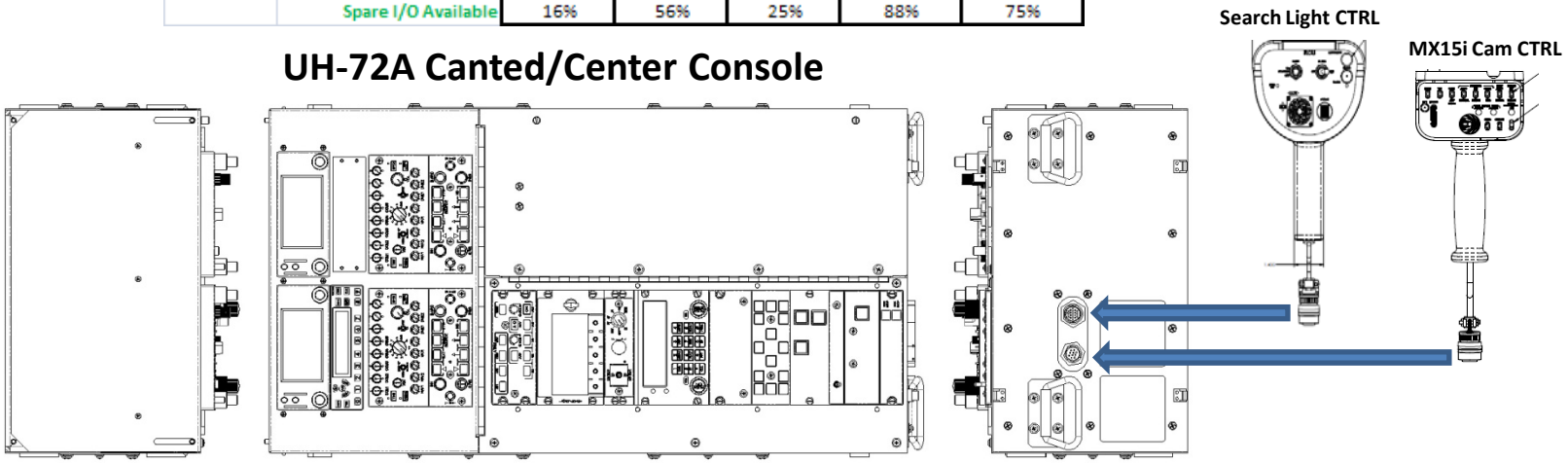

# *Center Console Serial Server*

- Serial Server
  - Serial-to-Ethernet Connectivity
  - Interfaces
    - 8 Serial RJ45 Ports (Switch Selectable, RS-232/422/485)
    - Throughput: 230 Kbps (Maximum)
    - Signal Support: TXD, RXD, RTS, CTS, DTR, DSR, and DCD
  - Power consumption: 6 Watts typical
  - Protocols: UDP/TCP, DHCP/RARP/ARP-Ping for IP Address assignment

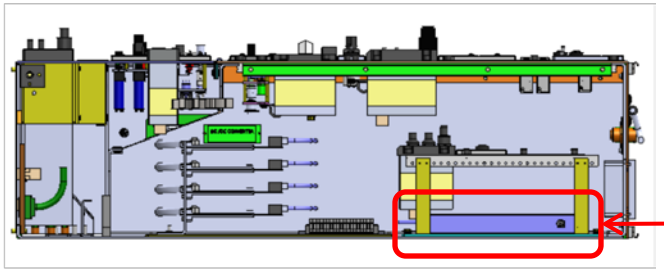

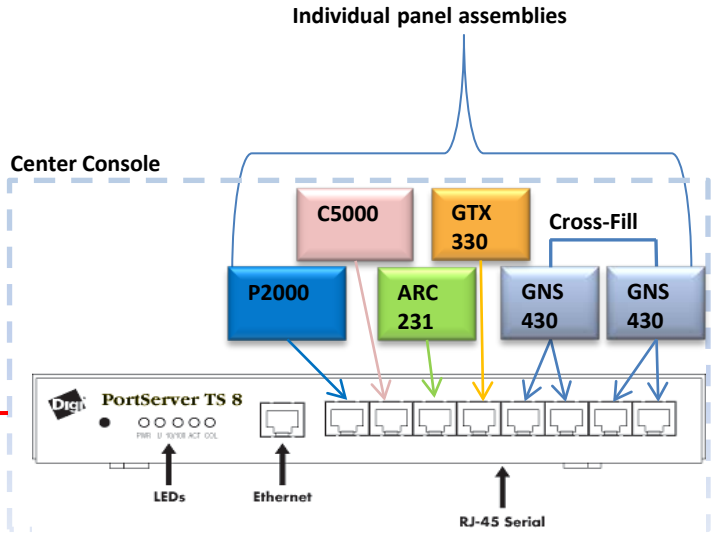

# *Center Console to Host Computer Connectivity*

- 25ft RJ-45 Ethernet Cable
  - Required for direct interface of Center Console serial server to the Manned Module Host Computer existing network card
  - To be installed in Manned Modules(MM) for all 23 Suites & SEEs of AVCATT (Total: 144 MM)

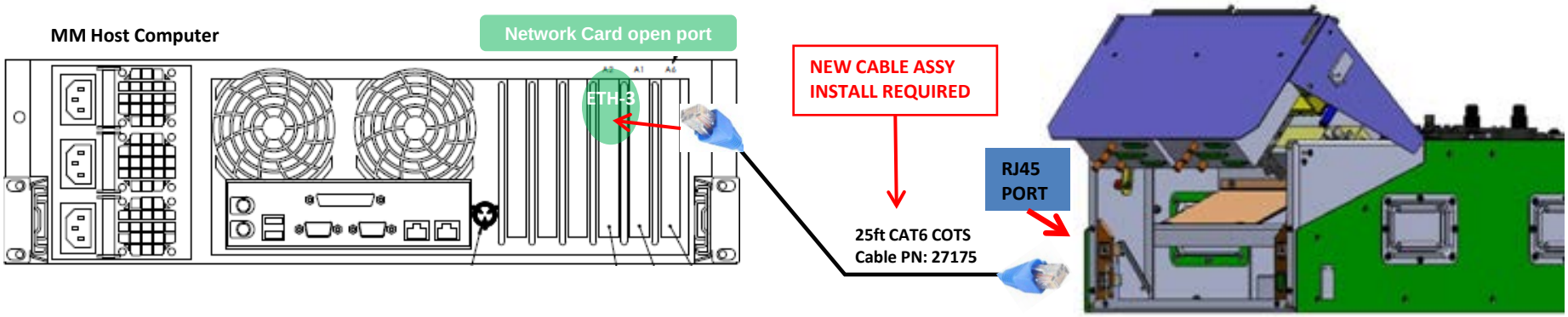


Center Console Assembly

# Overhead FIO Distribution

- Overhead will come with 1 FIO card installed

## UH-72A Overhead Panel

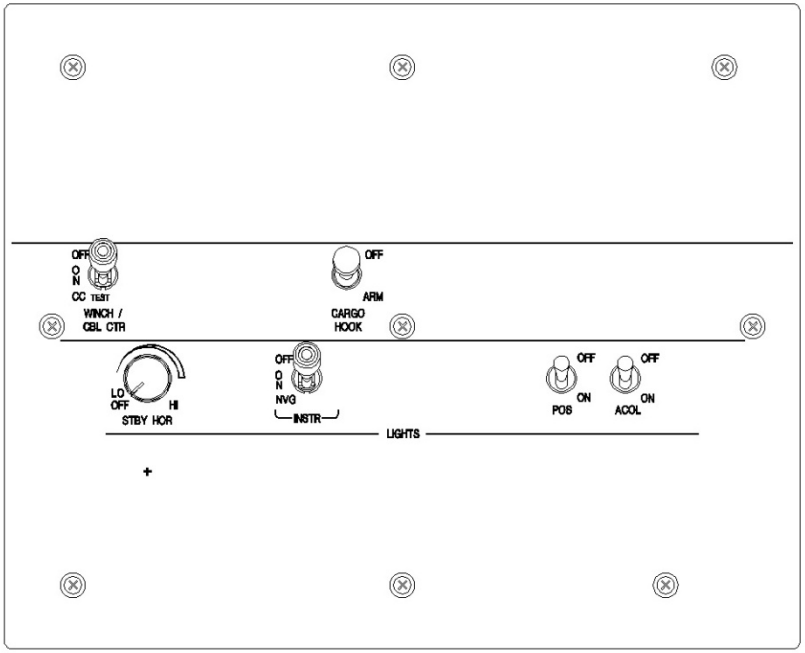


## Link's Existing Configuration

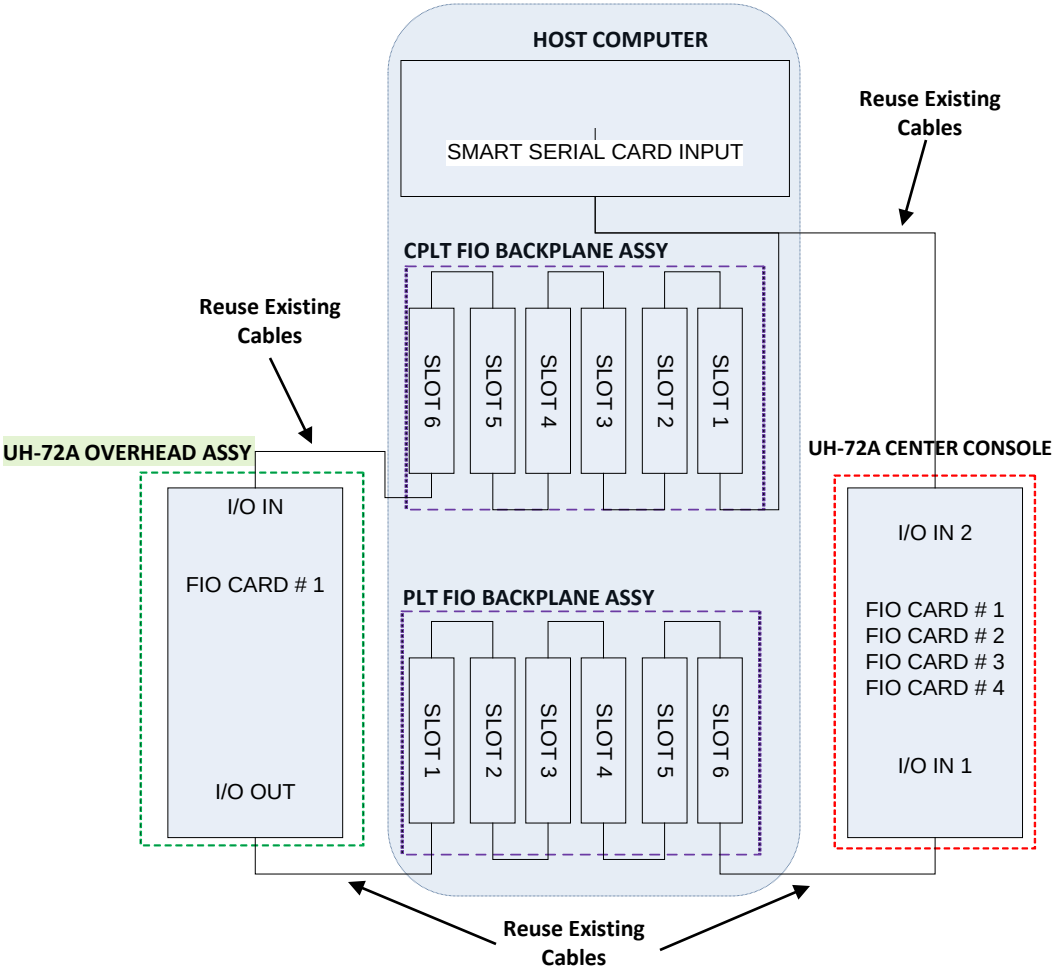

# *Overhead FIO Distribution*

| | Preliminary I/O Count | | | |
|---|---|---|---|---|
| | Digital In/Out | Lamp Out | Analog In | Analog Out |
| POS LT | 1 | 1 | 1 | 0 |
| ANT COL LT | 1 | 0 | 0 | 0 |
| NVG LT | 2 | 0 | 0 | 0 |
| CARGO HOOK | 1 | 0 | 0 | 0 |
| WINCH | 2 | 0 | 0 | 0 |
| STDBY HOR RHEOSTAT | 0 | 0 | 1 | 0 |
| LIGHT PLATE RTN | 0 | 1 | 0 | 0 |
| Total | 7 | 2 | 2 | 0 |
| 1 CARD FIO BUDGET | 32 | 16 | 8 | 4 |
| FIO CONSUMPTION: | 22% | 13% | 25% | 0% |
| Spare I/O Available | 78% | 88% | 75% | 100% |

**UH-72A Overhead Panel**

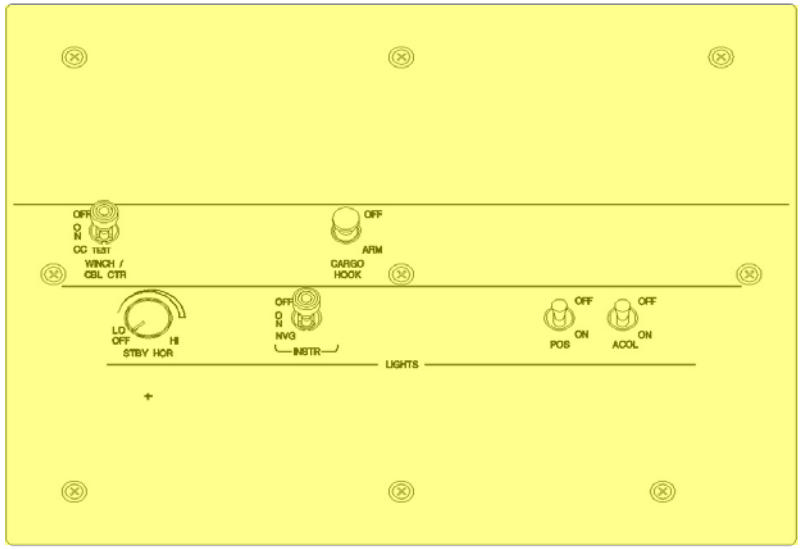


Yellow – Active
Green – Wallpaper
Blue – 3D Mockup
Purple – Projected

# *Cyclic / Collective Sticks and Grips*

- Vendor: Wittenstein
  - Link hardware part numbers as shown below

| Item | Description | Link Part Number |
|---|---|---|
| 1 | UH-72A Pilot Cyclic Assembly | P006988-001 |
| 2 | UH-72A Copilot Cyclic Assembly | P006988-002 |
| 3 | UH-72A Pilot Collective Assembly | P006988-003 |
| 4 | UH-72A Copilot Collective Assembly | P006988-004 |

# *Power and Heat Load Analysis*

- Heat load : No impact
- Total power capacity usage: less than 50%

# *Color Coding Scheme -Center Consoles & Overheads*

- Color markings to facilitate the configuration identification
  - Mark Overhead boxes two places:
    - Connector side and opposite connector side
    - Visible regardless of orientation in storage
  - Mark Center Console on the end of the box assembly above the connectors in drawings
  - Color Scheme
    - UH-72A = Gray #36231

| Configurations | Color Coding | FED-STD-595 Paint Number |
|---|---|---|
| UH-60A/L | Blue | 25095 |
| AH-64D | Red | 31136 |
| AH-64A | Orange | 22510 |
| OH-58D | Green | 24260 |
| CH-47D | Yellow | 23655 |
| CH-47F | White | 17925 |
| UH-60M | Violet | 17142 |
| UH-72A | Gray | 36231 |

# *Software Technical Overview*

- New UH-72A software configuration(s)
  - Thales NA core software
    - Aero / Engine / Flight Controls
    - Aircraft Systems
    - Cockpit PFD / ND / CAD / VEMD Displays
  - Stimulated Garmin 430W
  - L-3 software
    - Radio communications / seat shaker
    - EO/IR Sensor system
    - ECL (based on Thales-supplied force data)
    - Computer Systems (DEM / IG Control / FIO)
    - BMC/AAR
    - OneSAF
    - Communications GUI
  - GFE
    - Cockpit Mask
    - Ft. Bragg Database

# UH-72A Software Tree

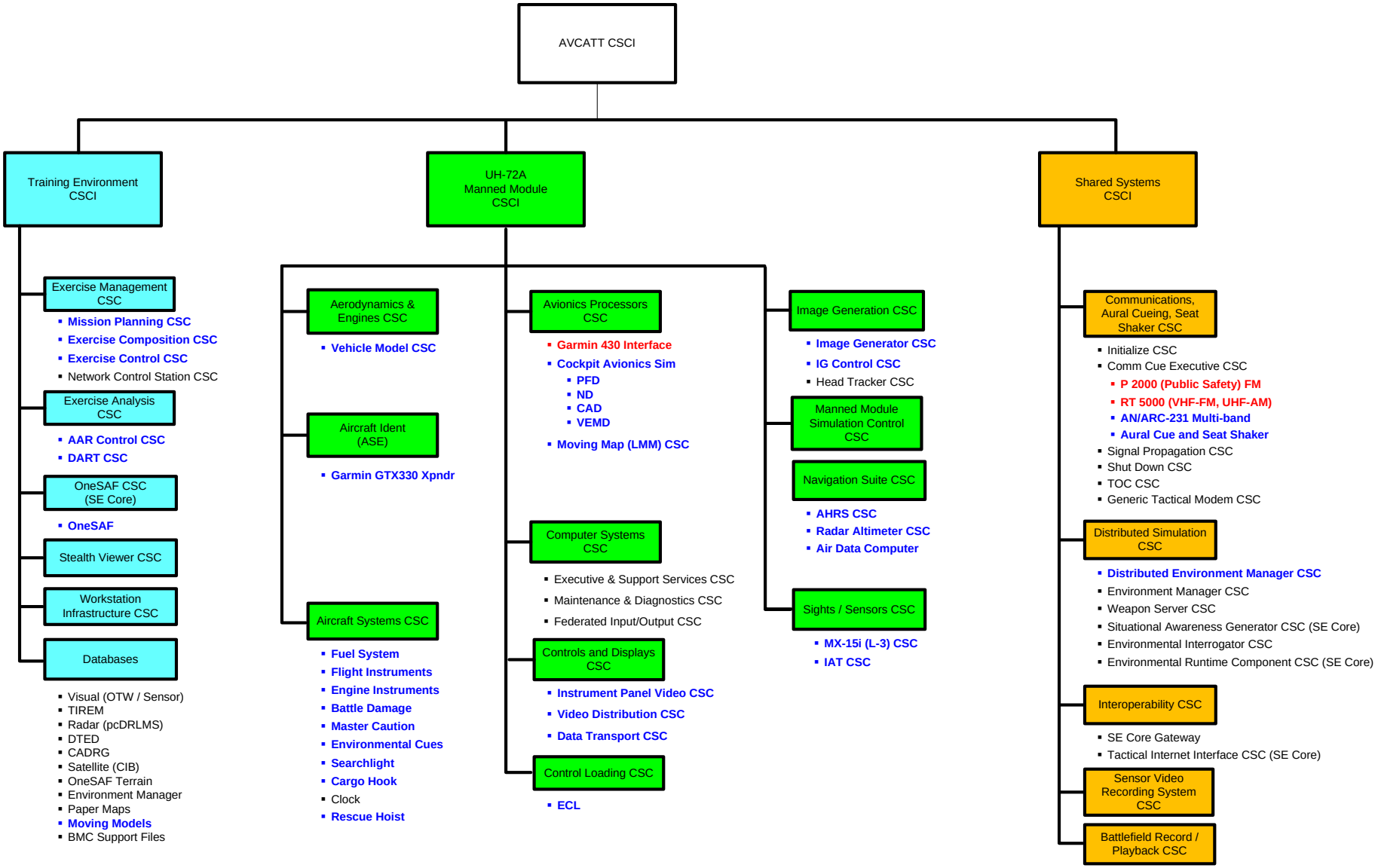

# *Aircraft Cockpit Avionics*

- “Cockpit Avionics” for the baseline EC-145 aircraft configuration include
  - Flight Control Display System (FCDS)
    - Pilot / Copilot Primary Flight Display (PFD)
    - Navigation Display (ND)
    - Autopilot Module (APM) [Part of the Flight CSC]
  - Central Panel Display System (CPDS)
    - Caution Advisory Display (CAD)
    - Vehicle Engine Management Display (VEMD)
  - Standby Instruments
  - Warning Panel
- Formed from the core commercial avionics configuration for a standard EC145 cockpit

# *Aircraft Cockpit Avionics (Cont)*

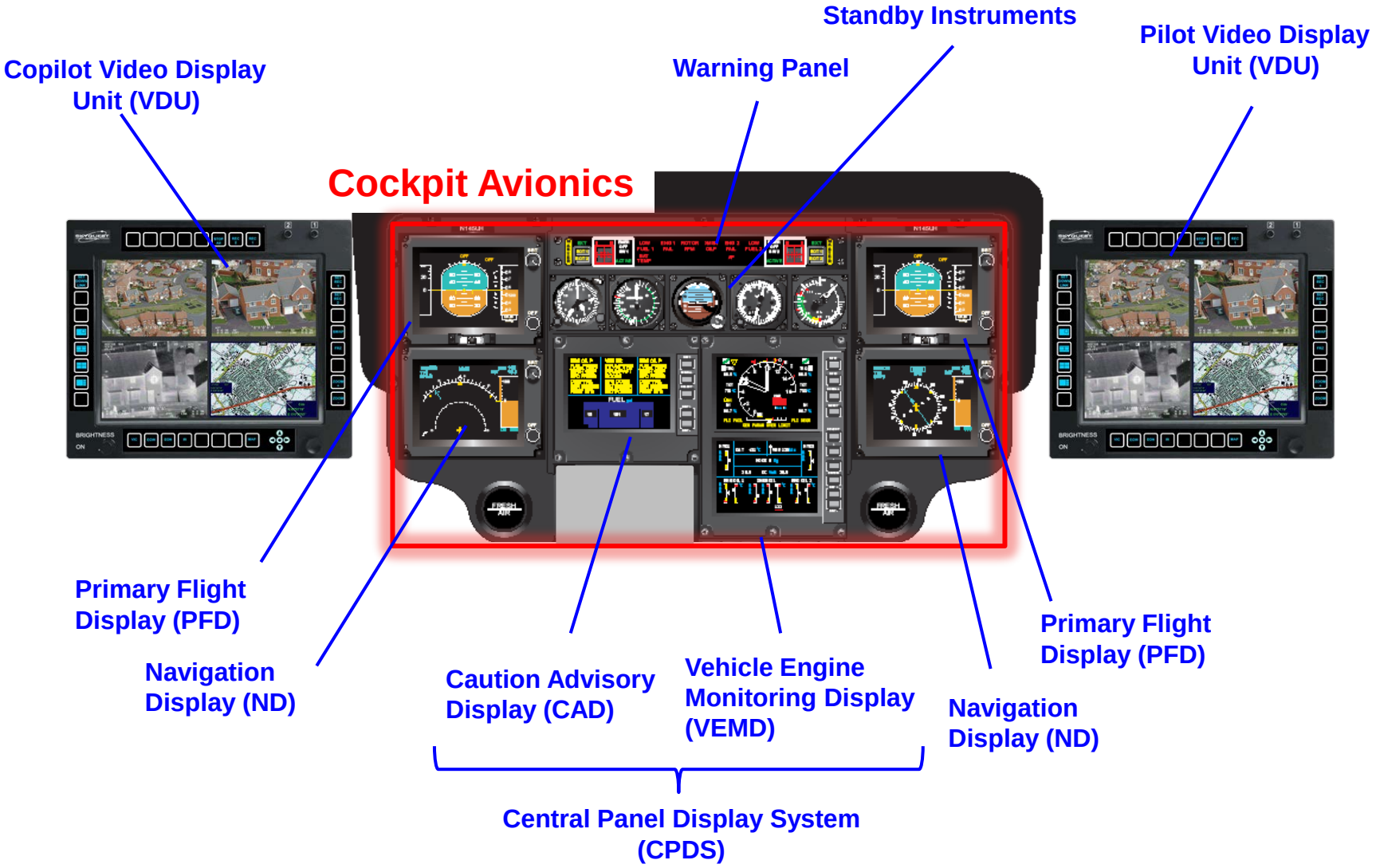

# UH-72A Aircraft System Diagram

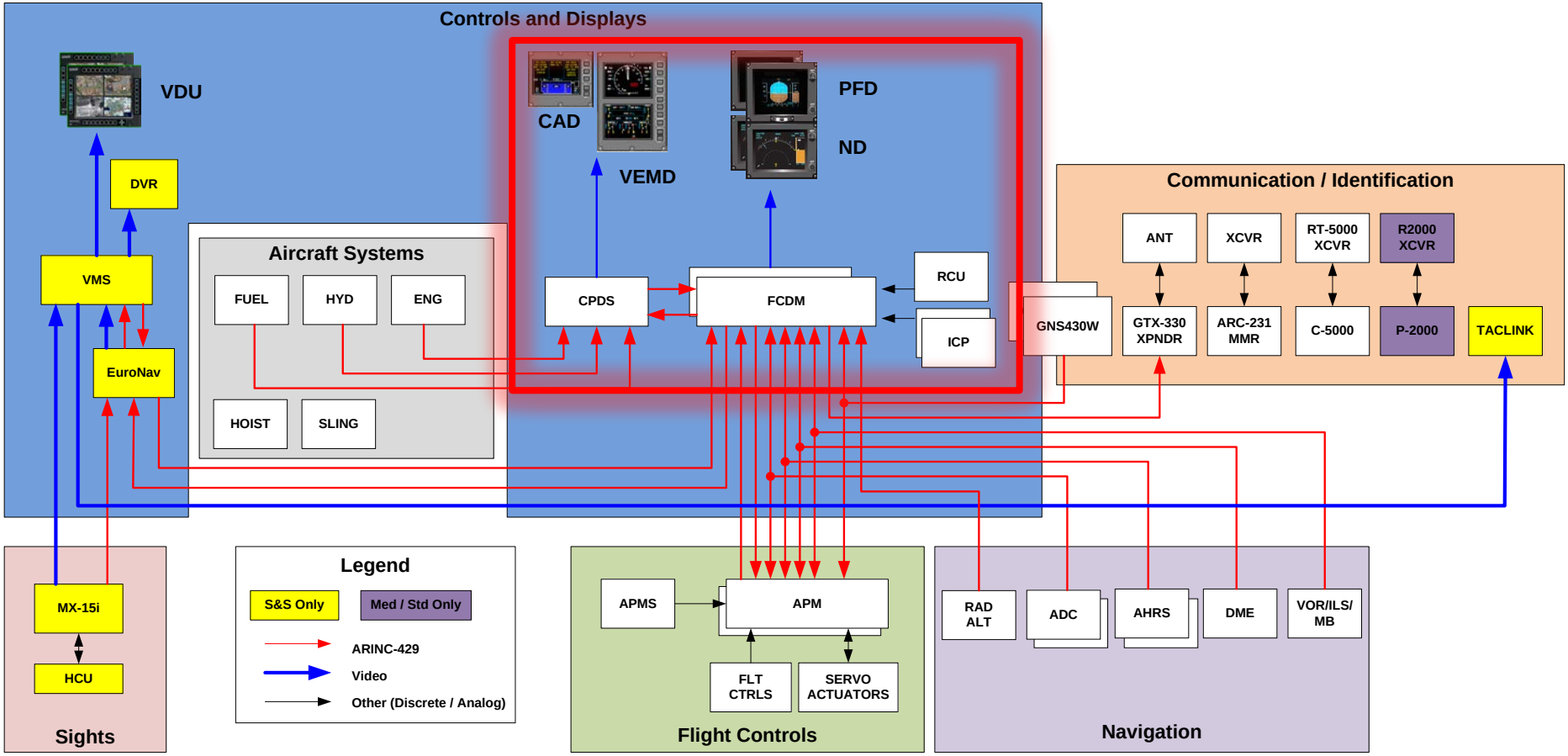


| | |
|---|---|
| ADC | Air Data Computer |
| AHRS | Attitude Heading Reference Set |
| ANT | Antenna |
| APM | Autopilot Module |
| APMS | Autopilot Mode Select Panel |
| CAD | Caution Advisory Display |
| CPDS | Central Panel Display System |
| DME | Distance Measuring Equipment |
| DVR | Digital Video Recorder |
| ENG | Engine Instrumentation |
| FCDM | Flight Control Display Module |
| GNS430W | Garmin GNS430W |
| HYD | Hydraulic System |
| ICP | Instrument Control Panel |
| ILS | Instrument Landing System |
| MB | Marker Beacon |
| MMR | Multimode Radio |
| ND | Navigation Display |
| PFD | Primary Flight Display |
| RADALT | Radar Altimeter |
| RCU | Reconfiguration Control Unit |
| S&S | Security & Support |
| VEMD | Vehicle Engine Management Display |
| VHF | Very High Frequency |
| VMS | Video Management System |
| VOR | VHF Omnidirectional Range |
| XCVR | Transceiver |
| XPNDR | Transponder |

# *Primary Flight Display*

- PFD provides basic Situational Awareness
  - Calibrated Airspeed
  - Altitude
  - Heading
  - Attitude
  - Vertical Speed
  - Pitch
  - Roll
  - Yaw
  - A/P Mode Annunciation
  - A/P Failures (Not Simulated)

# *Navigation Display*

- ND provides
  - Sector Mode
    - “Stick Map” route
    - NAVAID symbols
    - Airport symbols
    - Heading Bugs
  - HSI Mode
    - Compass Rose
    - Lateral Deviation
    - Radar Altitude

# *Vehicle Engine Management Display*

- VEMD provides
  - First limit indicator (FLI) [Rotor Torque, Engine Torque, Turbine Outlet Temperature, Engine N1]
  - Selectable Status Pages
    - System Status Page
    - Electrical / Vehicle Parameter Page (OAT / VNE / Hook)
    - Flight Report Page (Not Simulated)
    - Maintenance Mode Page (Not Simulated)
    - Configuration Mode Page (Not Simulated)
  - Failure of VEMD lanes will not be simulated
  - Automatic reconfiguration of pages due to system fault is not required (will never occur in AVCATT due to limited malfunctions)

Vehicle and Engine Monitoring Display (VEMD)

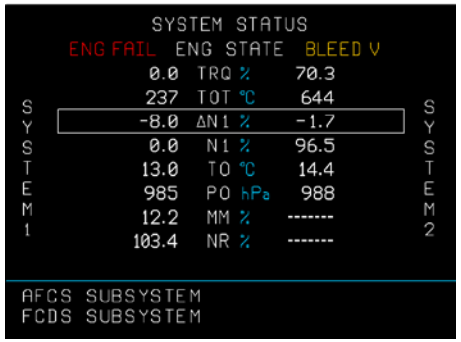


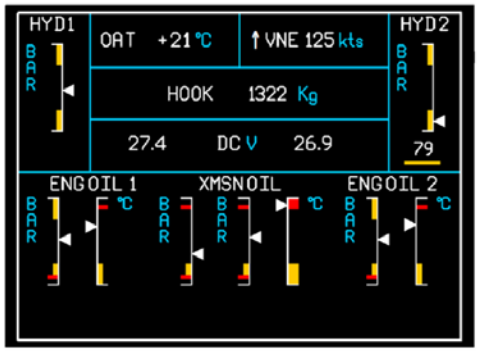

ELEC/VEH page

# *Caution Advisory Display*

- CAD provides Cautions and Advisories
  - Caution / Advisory Window and Fuel Window will be simulated for AVCATT
  - AVCATT Caution / Advisories
    - “XMSN CHIP” Caution
    - “HOOK UNLD” Advisory
    - “CABLE CUT” Caution

Caution / Advisory Window

Fuel Window

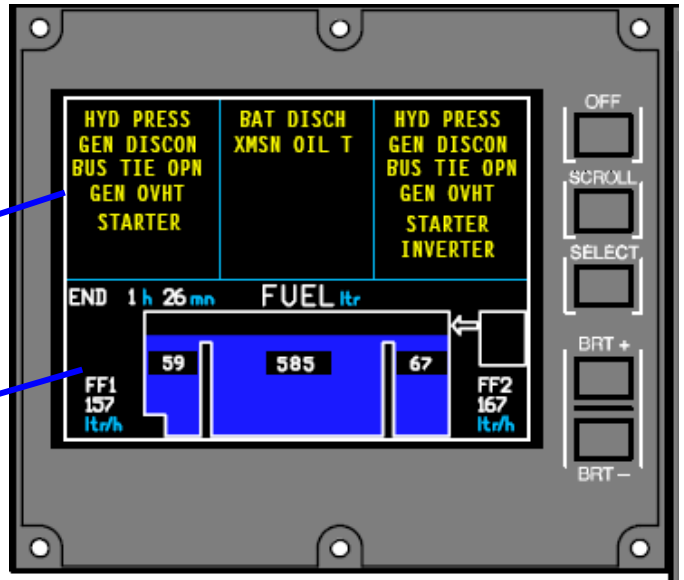


Caution and Advisory Display (CAD)

# *Standby Instruments*

- Standby Instruments
  - Clock
  - Airspeed Indicator
  - Attitude Indicator
  - Altimeter
  - Engine N2 / Rotor RPM

# *Aircraft Warning Panel Overview*

- Warning Panel provides warning indications for
  - Simulated
    - MASTER CAUTION light
    - LOW FUEL warning supply tank ½
    - ENG 1/2 FAIL warning (respective N1–RPM below threshold value)
    - ROTOR RPM warning (NRO too low or too high)
  - Not Simulated
    - EXT indicates bottle discharge activation (Not Simulated)
    - FIRE warning light/EMER OFF sw (Not Simulated)
    - Main transmission oil pressure warning (oil pressure below minimum) (Not Simulated)
    - ACTIVE indicates switch position for EMER OFF switch (Not Simulated)
    - Cargo smoke detection light (optional) (Not Simulated)
    - Autopilot warning (optional) (Not Simulated)
    - Battery overtemperature warning (Not Simulated)
    - BOT 1/2 pb availability of fire extinguisher bottle/activates respective bottle (Not Simulated)
    - EMER OFF SW indication (Not Simulated)

# Context Diagram

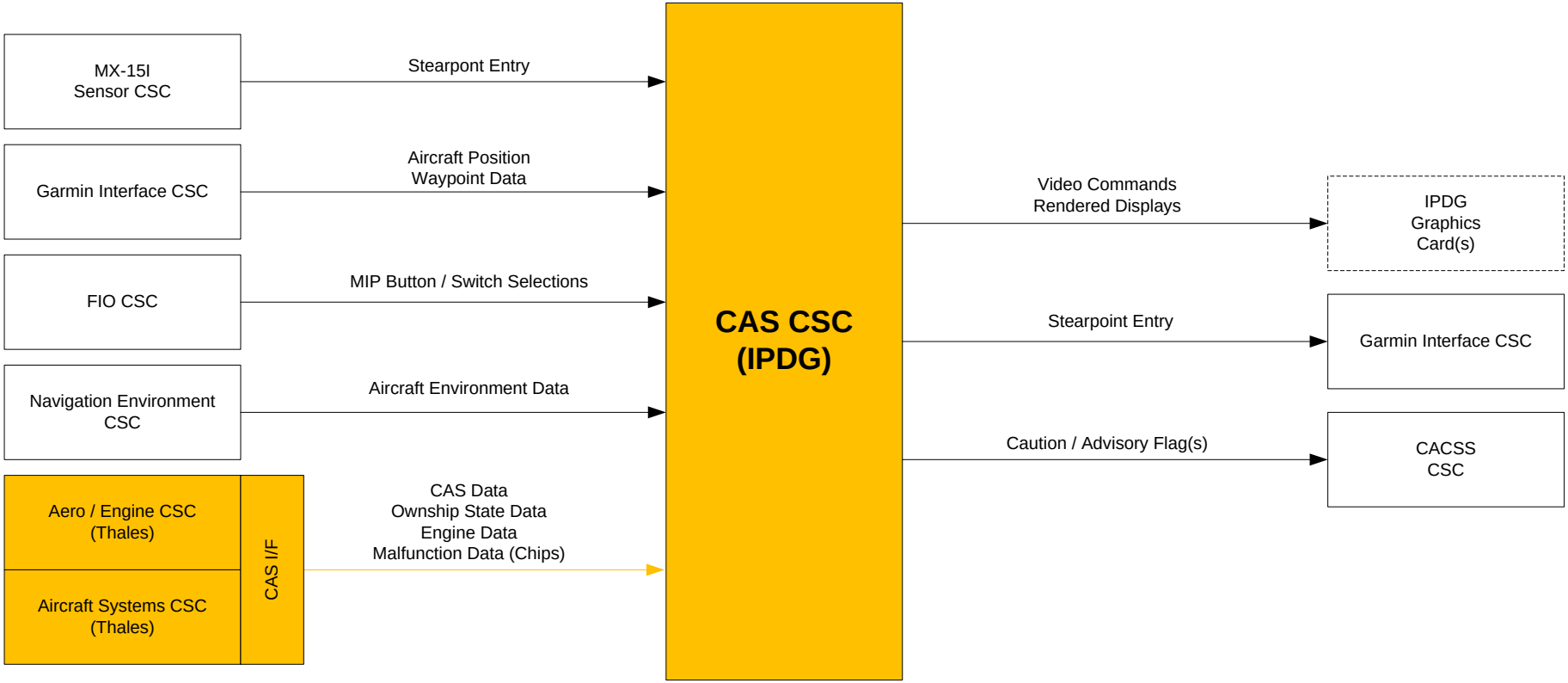

# *CAS CSC Design Approach*

- The AVCATT UH-72A CAS CSC will be based on pre-existing software from an FAA Level 6 EC145 Flight Training Device (FTD)
- Simulates all of the required CAS components and required functionality
- Software will be ported to the AVCATT Linux operating system by Thales and integrated with the other AVCATT software CSCs on the IPDG
  - Hosted on the MM Instrument Panel Display System (IPDS)
  - Interfaces with MM Host Computer via the MM LAN (Ethernet)
- The following displays will be LCDs embedded within the reconfigurable Main Instrument Panel (MIP) overlay
  - PFD (turn and slip displayed via cut-out below PFD display)
  - ND
  - VEMD
  - CAD

# *CAS CSC Design Approach (Cont)*

- The following displays will be projected using the Main Instrument Panel (MIP) overlay rear projectors
  - Standby Instruments
  - Warning Panel
  - MSG / WPT segment on the Navigation Panel

# AVCATT UH-72A System Diagram

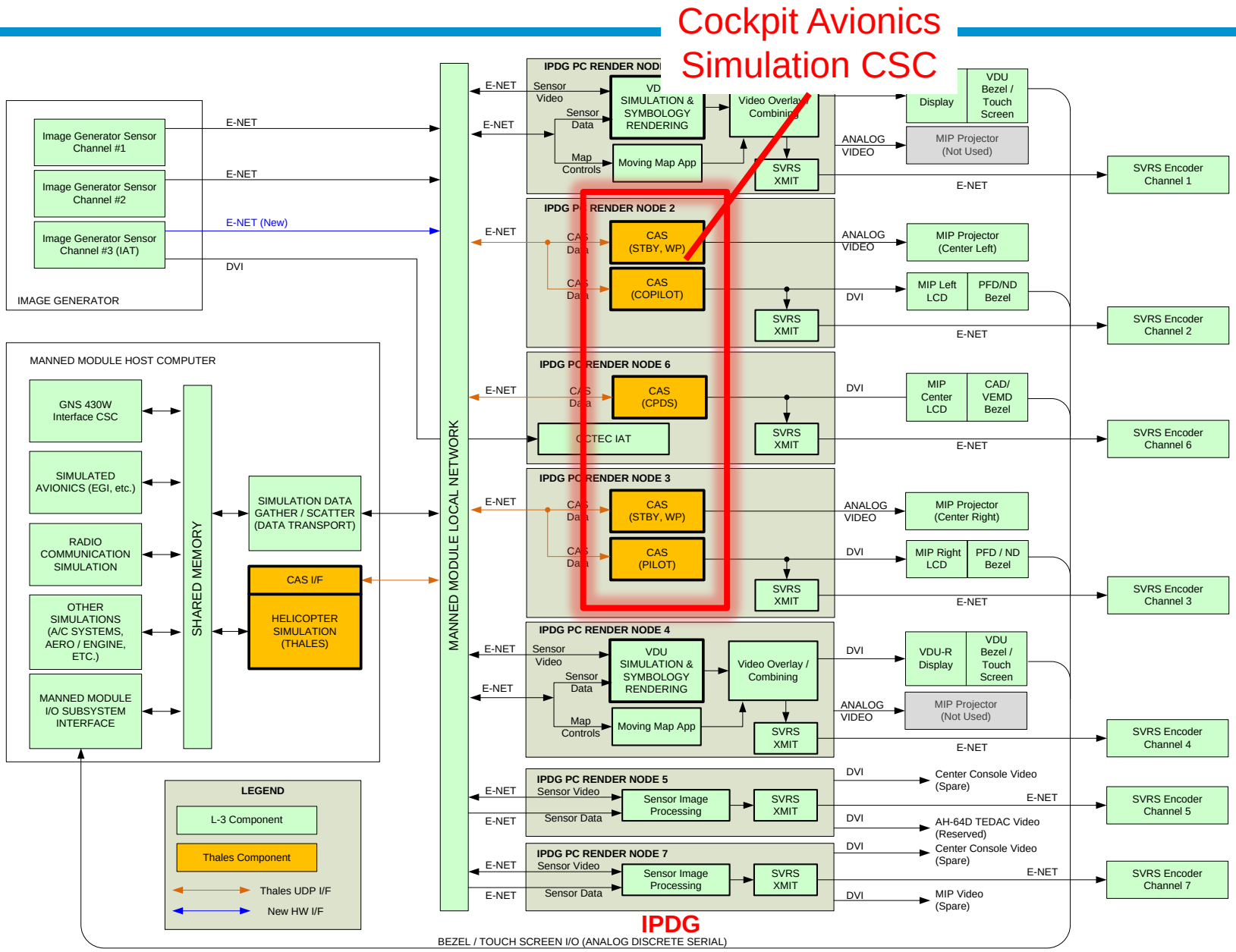

# *UH-72A Video Display Unit (VDU)*
# *(MX-15i, Moving Map, OMMI)*

# *VDU Operational Overview*

- The UH-72A VDU cockpit display integrates UH-72A specific functionality associated with
  - MX-15i Sensor Imagery Display
  - Euronav Moving Map Display
  - Operational Man Machine Interface (OMMI)
- The VDU and associated equipment are appliqué components to the baseline EC145 aircraft subsystems

# UH-72A Aircraft System Diagram

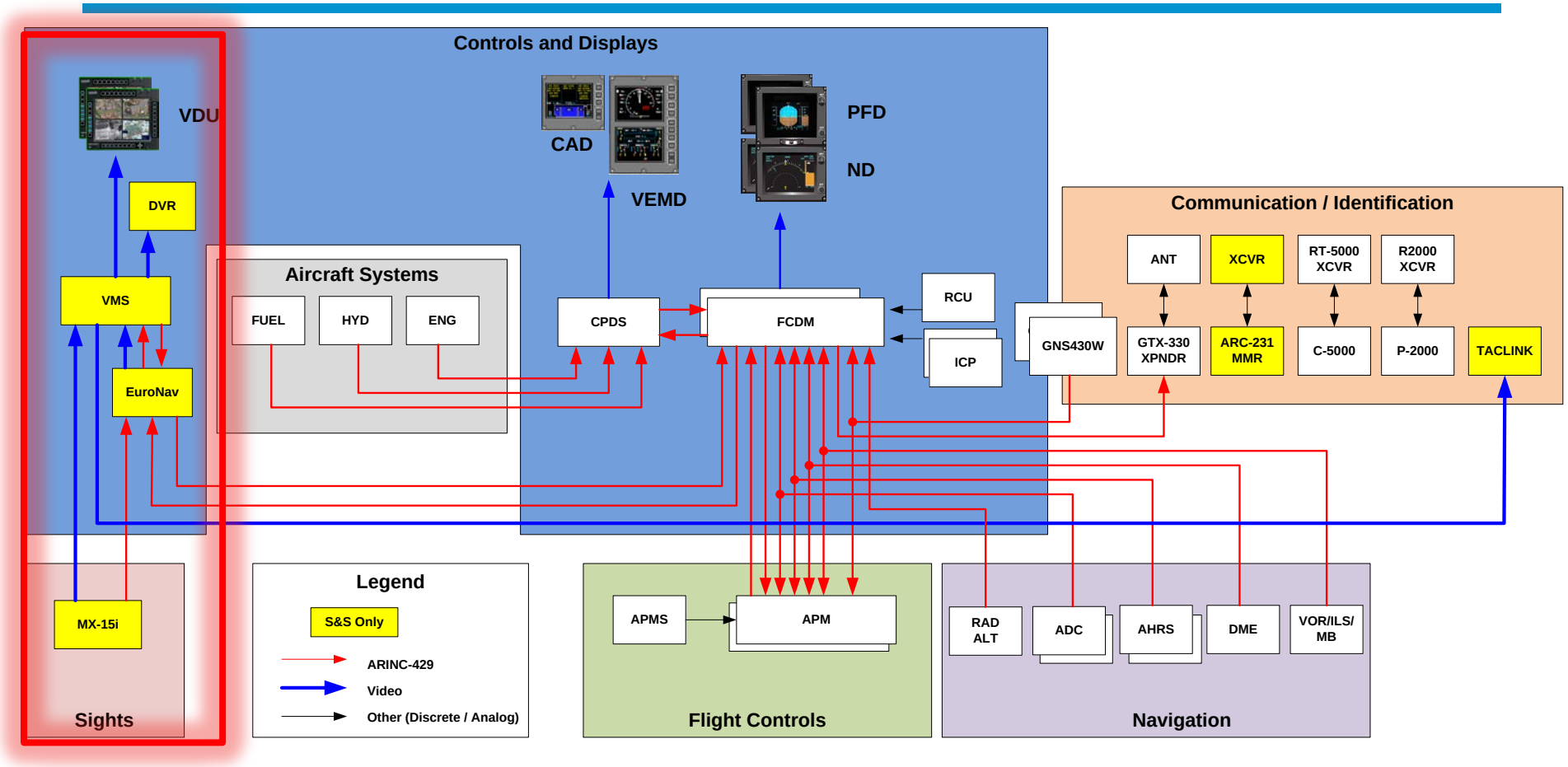


| | | | | | |
|---|---|---|---|---|---|
| ADC | Air Data Computer | FCDM | Flight Control Display Module | RCU | Reconfiguration Control Unit |
| AHRS | Attitude Heading Reference Set | GNS430W | Garmin GNS430W | S&S | Security & Support |
| ANT | Antenna | HYD | Hydraulic System | VEMD | Vehicle Engine Management Display |
| APM | Autopilot Module | ICP | Instrument Control Panel | VHF | Very High Frequency |
| APMS | Autopilot Mode Select Panel | ILS | Instrument Landing System | VMS | Video Management System |
| CAD | Caution Advisory Display | MB | Marker Beacon | VOR | VHF Omnidirectional Range |
| CPDS | Central Panel Display System | MMR | Multimode Radio | XCVR | Transceiver |
| DME | Distance Measuring Equipment | ND | Navigation Display | XPNDR | Transponder |
| DVR | Digital Video Recorder | PFD | Primary Flight Display | | |

# VDU Operational Overview (Cont)

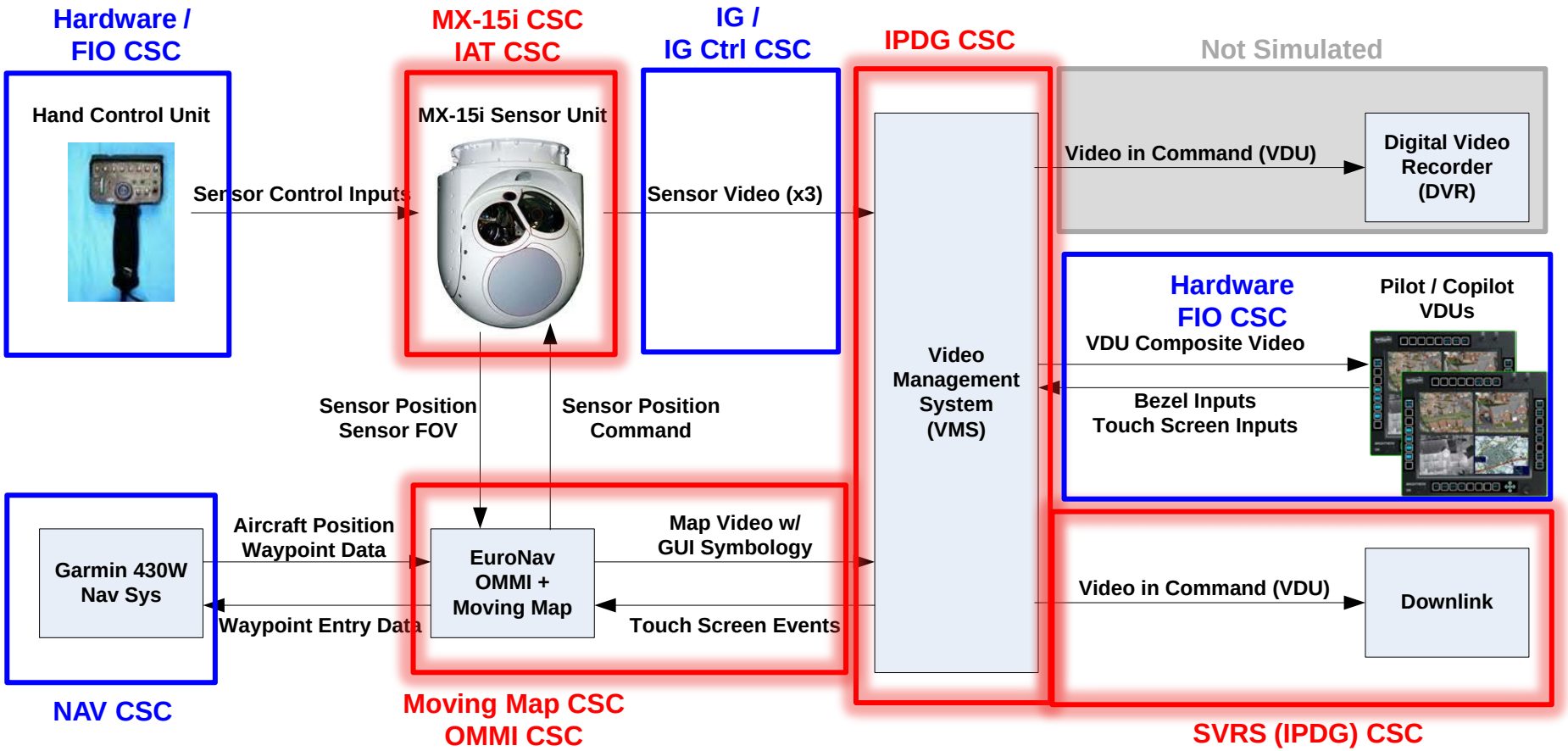

# *Aircraft System Overview*

- The MX-15i is a self-contained integrated EO/IR sensor system installed on the UH-72A Security & Support configuration
- The MX-15i has similar capabilities to the AH-64D Modernized Target Acquisition Designation System (MTADS) and OH-58D Mast Mounted Sight (MMS)
  - Additional Capabilities
    - Third independent Color TV (CoTV) sensor channel
    - Continuous optical zoom on the CoTV sensor channel (vs. only fixed zoom levels)
    - Laser illuminator
    - Optical filters for EO image enhancement
  - Lesser Capabilities
    - No Laser Spot Tracker
    - No Laser Designator
    - No Laser Rangefinder

# UH-72A Aircraft System Diagram

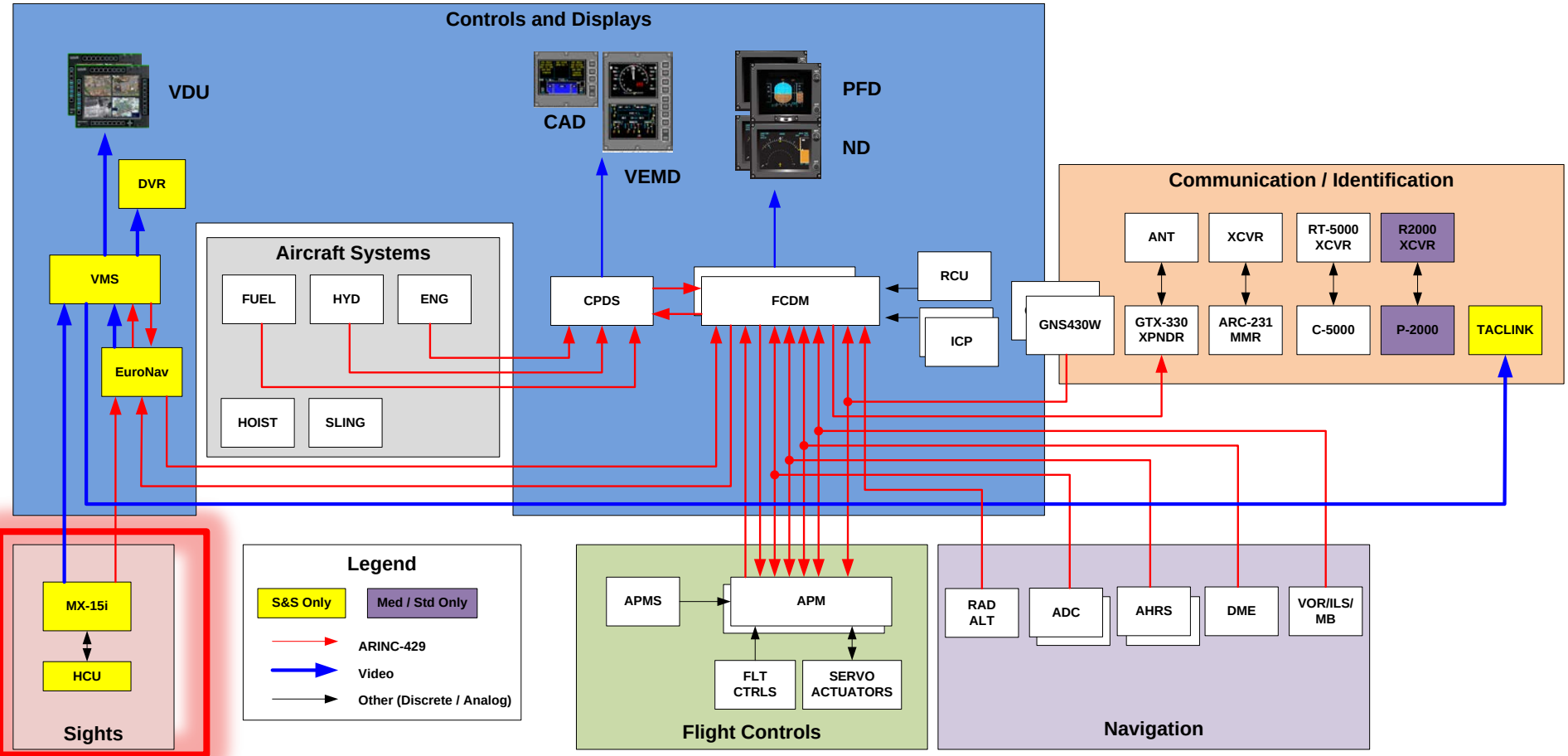


| | |
|---|---|
| ADC | Air Data Computer |
| AHRS | Attitude Heading Reference Set |
| ANT | Antenna |
| APM | Autopilot Module |
| APMS | Autopilot Mode Select Panel |
| CAD | Caution Advisory Display |
| CPDS | Central Panel Display System |
| DME | Distance Measuring Equipment |
| DVR | Digital Video Recorder |
| ENG | Engine Instrumentation |
| FCDM | Flight Control Display Module |
| GNS430W | Garmin GNS430W |
| HYD | Hydraulic System |
| ICP | Instrument Control Panel |
| ILS | Instrument Landing System |
| MB | Marker Beacon |
| MMR | Multimode Radio |
| ND | Navigation Display |
| PFD | Primary Flight Display |
| RADALT | Radar Altimeter |
| RCU | Reconfiguration Control Unit |
| S&S | Security & Support |
| VEMD | Vehicle Engine Management Display |
| VHF | Very High Frequency |
| VMS | Video Management System |
| VOR | VHF Omnidirectional Range |
| XCVR | Transceiver |
| XPNDR | Transponder |

# *Aircraft System Overview (Cont)*

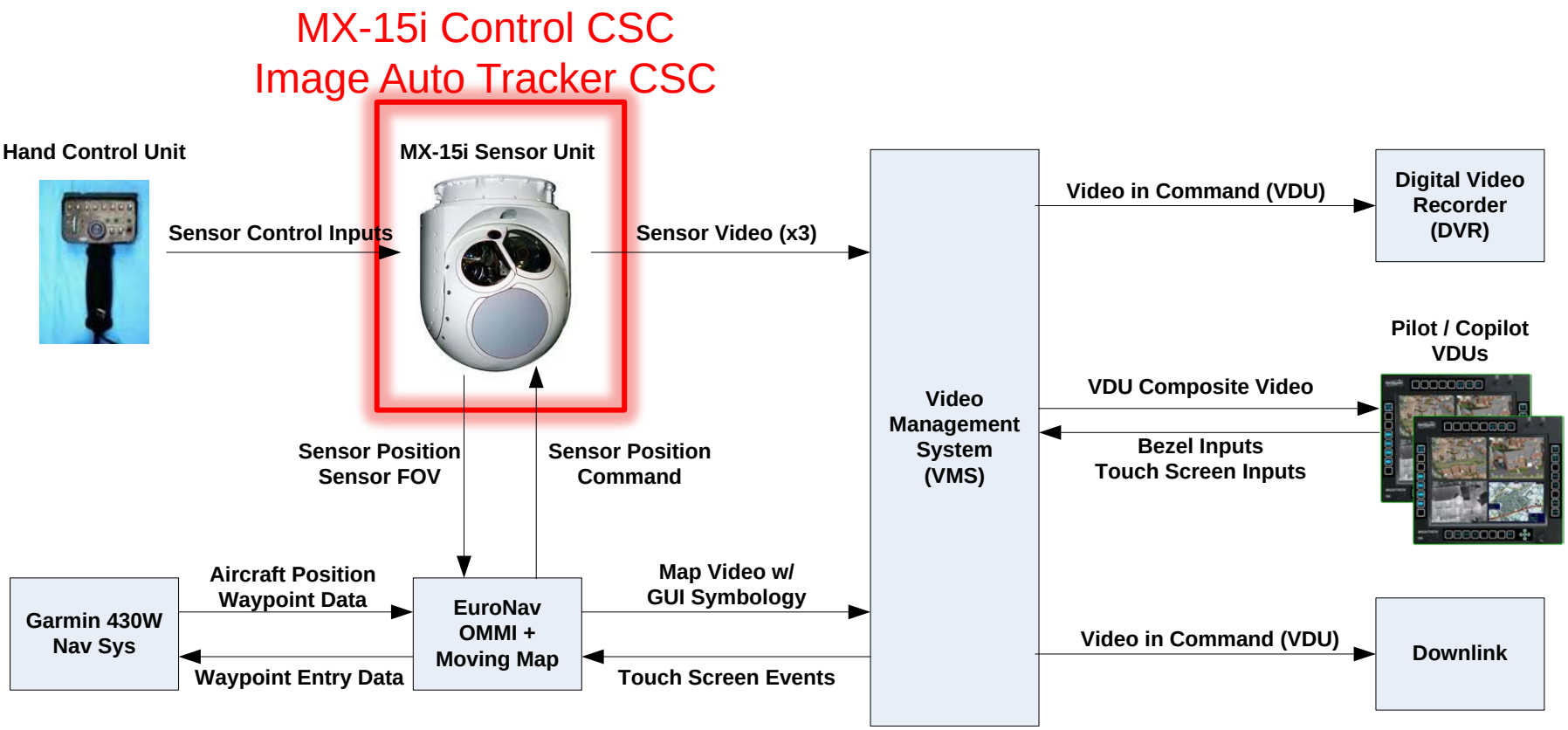

# *MX-15i Control CSC Concept of Operation*

- The MX-15i Control CSC controls the following elements
  - Turret Control
    - Set the MX-15i turret line of sight based on commands from FIO (Hand Control Unit) and the simulated EuroNav function
    - Reports turret status and current LOS to the Moving Map / VDU CSCs
  - Automatic Video Tracker (AVT) Control
    - Sets the AVT modes based on commands from FIO (Hand Control Unit)
    - Sets the AVT video source (EOW, EON, IR)
  - Laser Illuminator
    - Enables laser when commanded by ECL/FIO
    - Sends lasing information to the DEM
  - Linear Motion Compensation (LMC)
    - Aids in tracking
    - Compensates for helicopter movement as well as target movement
  - Visual Control
    - Sends line of sight and field of view selections to IG Control and IPDG
    - Sends lasing illuminator information to IG Control

# *MX-15i Control CSC Context Diagram*

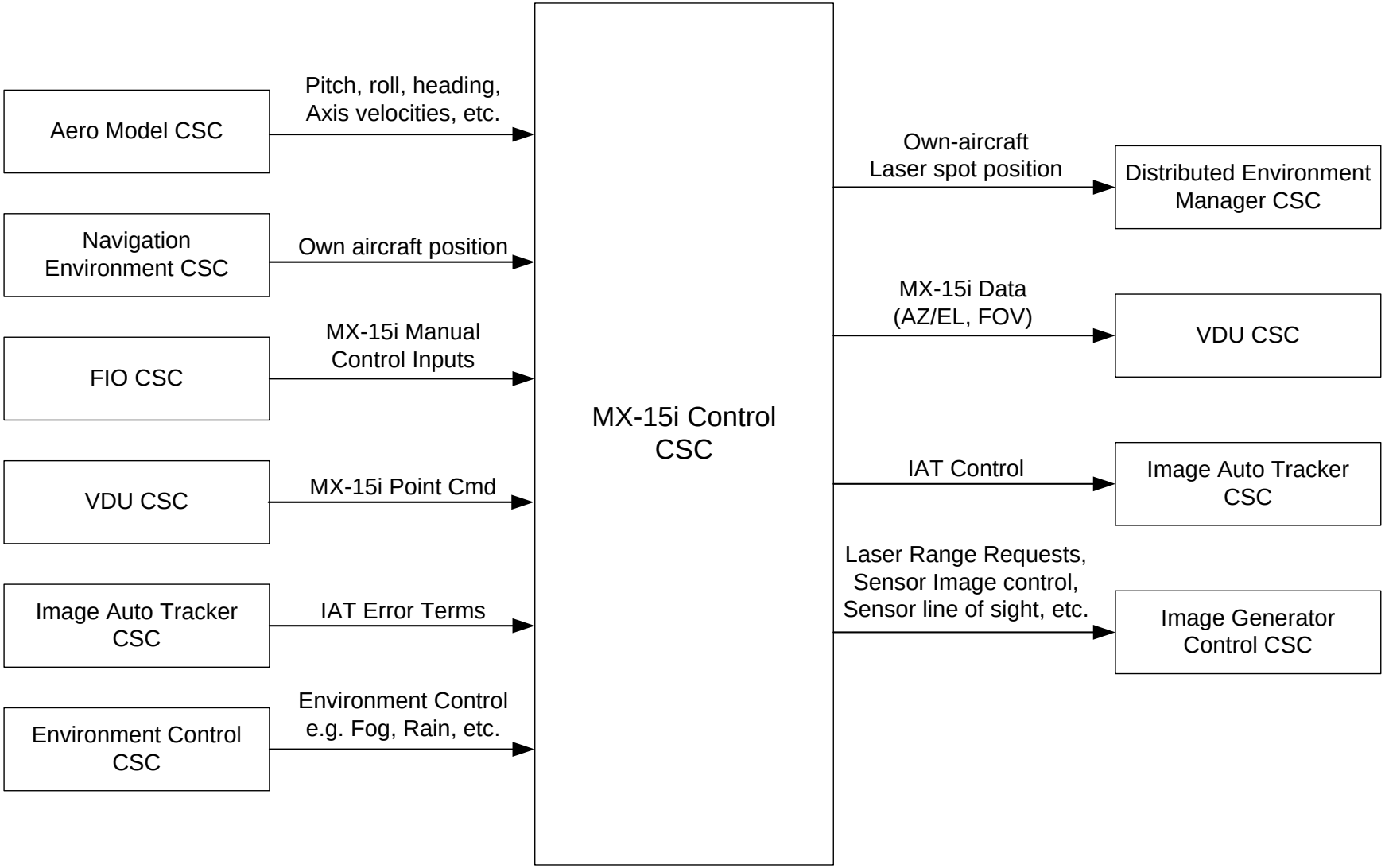

# *MX-15i Control CSC Design Approach*

- The new MX-15i sensor control simulation will be based on re-use from the following baselines
  - AVCATT Longbow AH-64D MTADS sensor simulation
    - AVCATT specific FOV controls
    - AVCATT IAT interface and controls
    - AVCATT DEM interface
  - P-3 Orion MX-15 sensor simulation (symbology, specific control)
    - MX-15 symbology
    - MX-15 specific modeling and controls
- At run time a hardware controlled parameter will be polled to determine if the UH-72A S&S configuration is active; otherwise CSC will not execute
- Boresight will not be simulated (always a perfect system)

# *MX-15i AVT CSC Context Diagram*

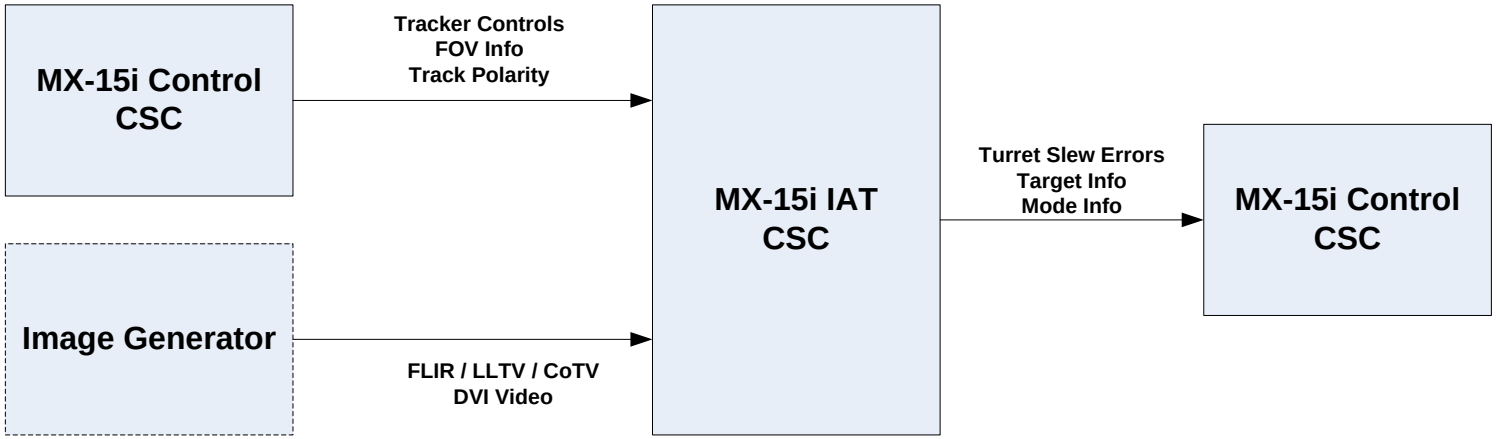

# *MX-15i AVT Design Approach*

- The AH-64D IAT CSC baseline will be used for the UH-72A MX-15i AVT CSC
  - The MX-15i AVT CSC is hosted on the IPDG per the AH-64D baseline and will utilize the IPDG-based OCTEC ADEPT75 tracking card
    - OCTEC ADEPT75 card uses a built in image tracker that is capable of tracking objects from the image (FLIR/LLTV/CoTV) sent from the Rockwell Collins IG.
  - Automatic Video Tracker (AVT)
    - Acquire target modes
    - Delete Target Modes to the OCTEC card
    - Coasting modes for obscured targets
    - Handles target tracking and coasting modes during FOV switching
  - Symbology Generator
    - Generates Symbology to be sent to the IPDG's
    - Generates tracking gate symbology

# AVT System Diagram

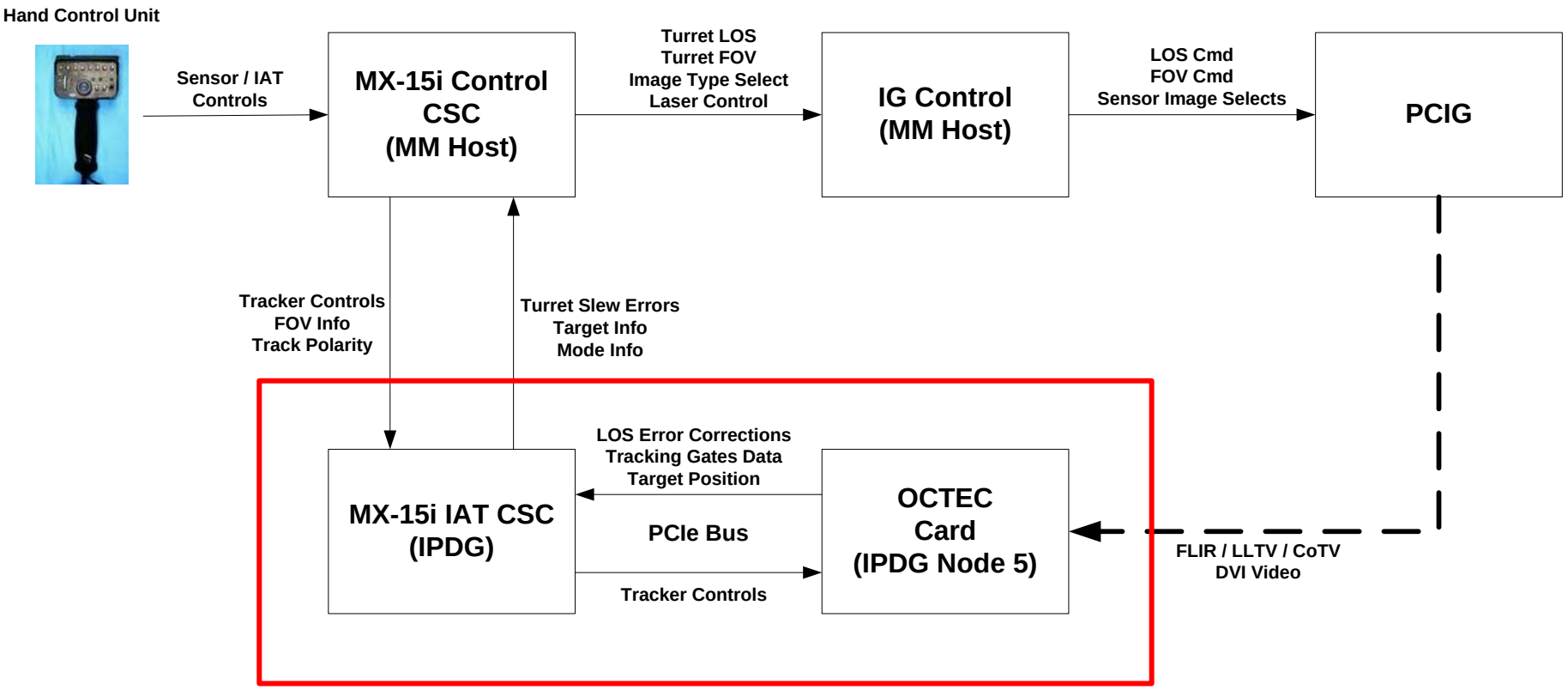

# *Aircraft Subsystem Overview*

- The UH-72A aircraft incorporates the Euronav mapping system
- The Euronav map is integrated / composited with the sensor video within the Video Management System (VMS) for display within the Video Display Unit (VDU)

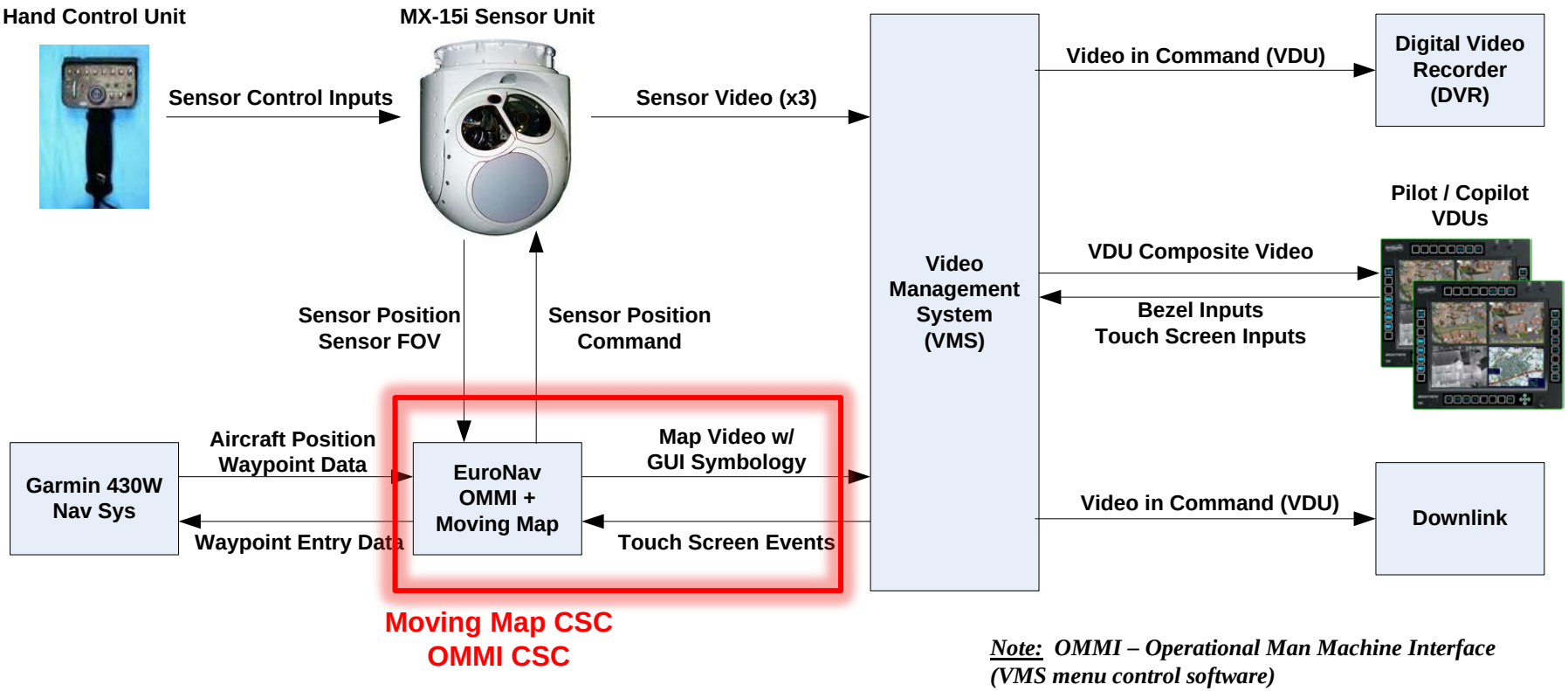


***Note:*** *OMMI – Operational Man Machine Interface (VMS menu control software)*

# UH-72A Aircraft System Diagram

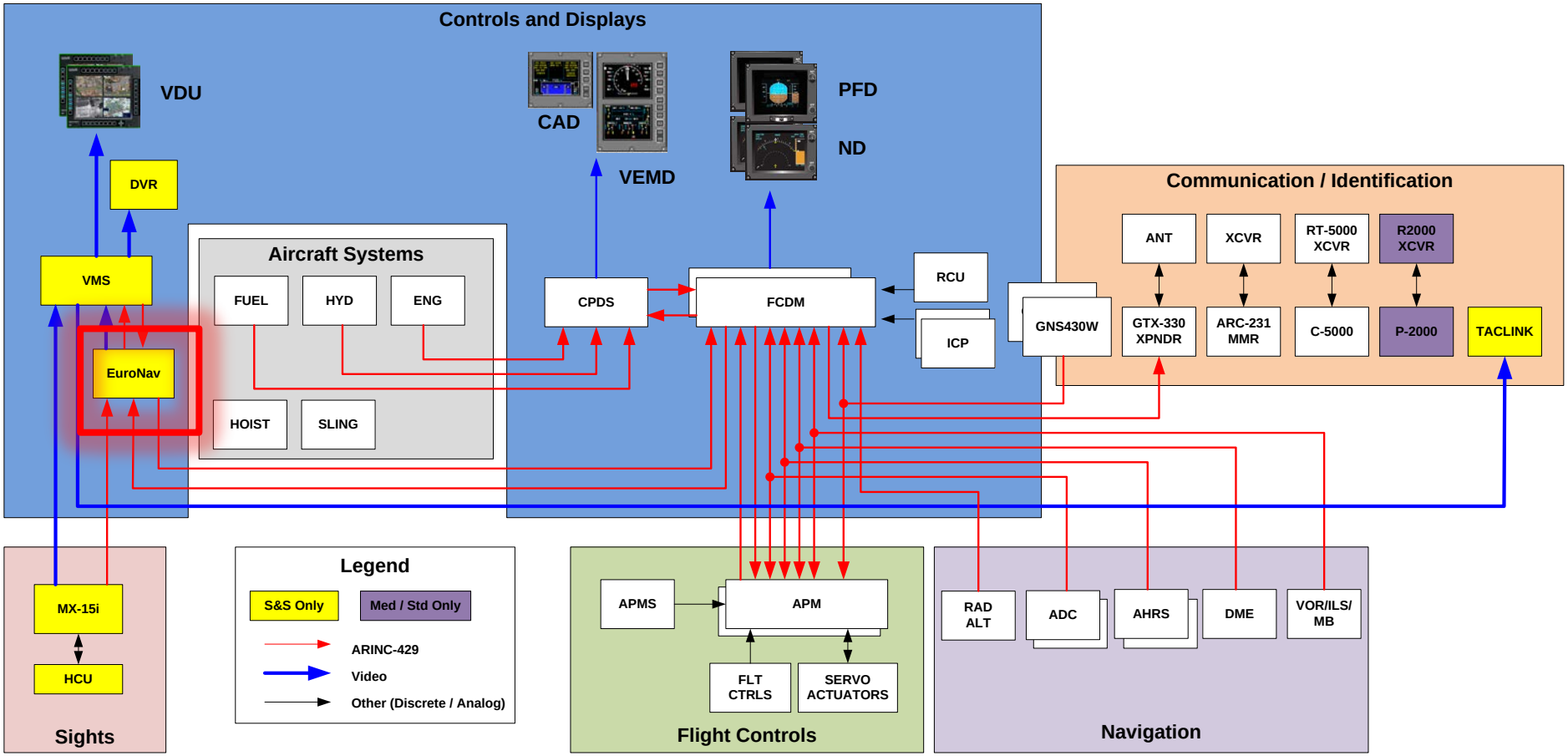


| | |
|---|---|
| ADC | Air Data Computer |
| AHRS | Attitude Heading Reference Set |
| ANT | Antenna |
| APM | Autopilot Module |
| APMS | Autopilot Mode Select Panel |
| CAD | Caution Advisory Display |
| CPDS | Central Panel Display System |
| DME | Distance Measuring Equipment |
| DVR | Digital Video Recorder |
| ENG | Engine Instrumentation |
| FCDM | Flight Control Display Module |
| GNS430W | Garmin GNS430W |
| HYD | Hydraulic System |
| ICP | Instrument Control Panel |
| ILS | Instrument Landing System |
| MB | Marker Beacon |
| MMR | Multimode Radio |
| ND | Navigation Display |
| PFD | Primary Flight Display |
| RADALT | Radar Altimeter |
| RCU | Reconfiguration Control Unit |
| S&S | Security & Support |
| VEMD | Vehicle Engine Management Display |
| VHF | Very High Frequency |
| VMS | Video Management System |
| VOR | VHF Omnidirectional Range |
| XCVR | Transceiver |
| XPNDR | Transponder |

# *Aircraft Subsystem Overview (Cont)*

- The Euronav system is controlled via
  - Touch Screen pointing device using menu driven with touch screen VDU menus / GUI pop-ups (Operational Man Machine Interface - OMMI)
  - Center console EuroNav Control Unit (CON UNIT)
  - Keyboard (back seat only – not simulated for AVCATT)

**Physical Keyboard**
**(Rear Seat)**
**(Not Simulated)**

**Control Unit**
**(Center Console)**

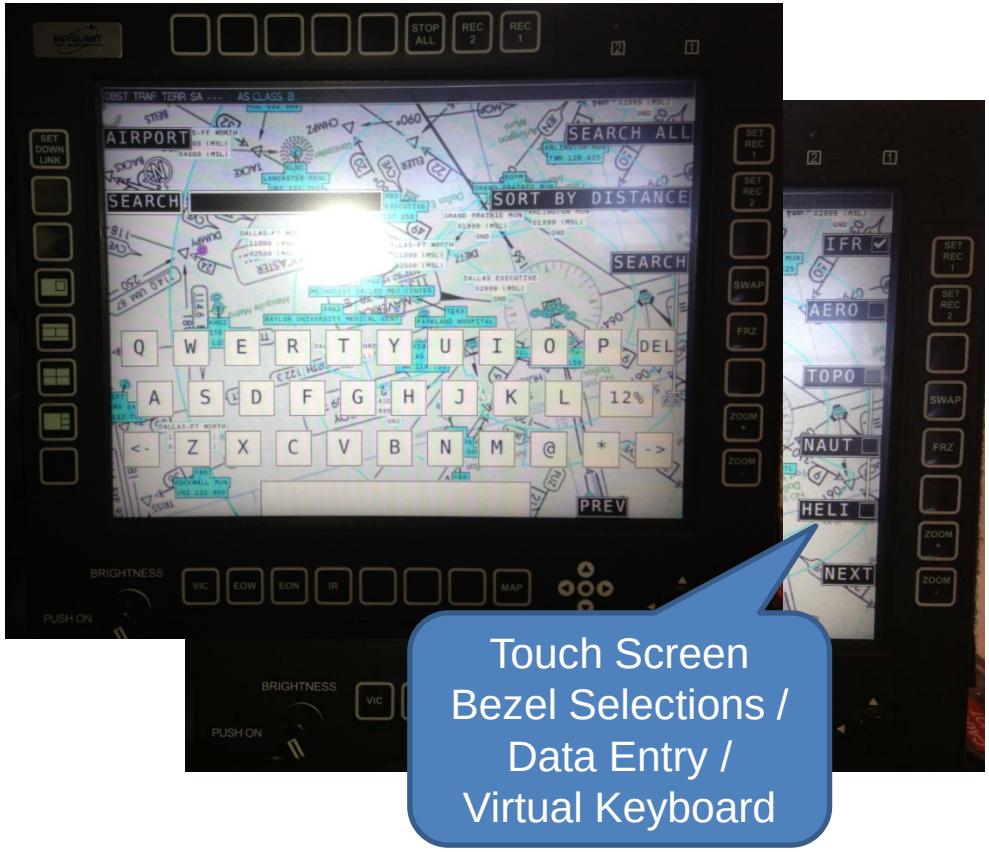

# *Aircraft Subsystem Overview (Cont)*

- The **Keyboard** (at the rear seat) allows for access to the full menu and the fastest means of data entry and retrieval from the system (Not Simulated)
- The **Control Unit** (at the center console) has the same depth of access to the menu as the keyboard but is limited in terms of speed of entry
- The VDU **Touchscreen** has a condensed version of menu items (i.e. limited menu access), and specifically designed for the S&S Battalion. It can be operated from all three displays
- The **Maintenance ports** (at the left hand side of the center console) allows the user to upload map updates or to retrieve data and perform maintenance actions

# *Aircraft Subsystem Overview (Cont)*

- The Euronav system supports the following map types
  - **Raster maps (i.e. CADRG)** - These consist of pixels. The maps give a good picture but the writing turns with the turning of the map and the zooming capabilities are limited
  - **Vector ground maps** - These maps consist of lines that are drawn on the screen. The maps can be turned with writing staying upright. The colouring and text sizing can be changed using the appearance editor
  - **Terrain Maps (i.e. DTED)** - These Maps are pixel maps. But each pixel does not contain a colour but the altitude of the terrain. Therefore the maps can be coloured depending on the flight situation
  - **Air Navigation Maps (i.e. Jeppesen ®)** - These Maps are vector maps that contain the airports, NDB, VOR, Airspaces and other air traffic related information
  - **JeppView® Maps (Jeppesen ®)** - These Maps are vector maps that contain procedures (e.g. airport approach info) and other charts

# *Moving Map Design Approach*

- The AVCATT UH-60M / CH-47F Moving Map capabilities will be used as the baseline for UH-72A
- The baseline Moving Map (UH-60M / CH-47F) supports the following UH-72A aircraft moving map capabilities
  - Display Raster Map (i.e. Compressed Arc Digitized Raster Graphic (CADRG)) (2D)
  - Digital Terrain Elevation Data (DTED) Level 1 & 2 [DIG] Map Display (2D) underlay
  - Shaded Elevation Maps [Slope Shading]
  - Elevation Color Banding: Static, A/C
  - Intervisibility (Threat rings)
  - Zooming, Scaling, Panning, and Orientation Controls
  - Color Map Display
- The baseline capabilities will be augmented with new capabilities to support the UH-72A configuration

# *Moving Map Design Approach (Cont)*

- The baseline capabilities will be augmented with new capabilities to support the UH-72A configuration (per lower level Fidelity Analysis)
  - New Map Types / Capabilities
    - Vector Ground Maps (Street Maps)
    - Air Navigation Maps (Vector Maps with airport info)
  - New Capabilities
    - Touch Screen GUI Interface
      - Bezel Menu Selections
      - Soft Keyboard / Data Entry
      - Overlays
        - » Status Lines / Data
        - » Rose / Range Arc / Track Line
        - » Panning
        - » Flight Plan
        - » Escape Rings
        - » Camera Pointing
        - » Address & POI Database Query/Search For Geo-location Data
    - Control Panel / Keyboard Pop-Up GUI Menus
      - Configuration / Selection Menus per low level Fidelity Analysis
      - Camera Pointing

# UH-72A Map / OMMI Fidelity Analysis

| Feature Name | Software Fidelity | | | |
|---|---|---|---|---|
| | Not Simulated | Wallpaper Only | Functional Fidelity | Notes |
| Raster format (CADRG) | | | X | |
| Terrain format (DTED) | | | X | |
| Vector | | | X | |
| Jeppesen | | | X | Airports and other air traffic info. |
| DTED Setup Menu | X | | | DTED setup is statically defined in XML. |
| Administrator Mode Menu | X | | | |
| Soft Keyboard | | | X | |
| Pow er Off Menu | X | | | |
| Moving map w ith cursor keys | | | X | |
| Zooming map w ith zoom keys | | | X | |
| Panning modes | | | X | |
| Map Screen Modes | | | X | North up, Heading up |
| Overlays – Top Status line | | | X | |
| Overlays – North Indicator | | | X | |
| Overlays – Panning / Zoom Center | | | X | |
| Overlays – Pos / Dist of Panning Center | | | X | |
| Overlays - Scale | | | X | |
| Overlays – A/C Position | | | X | |
| Overlays – Bottom Status Lines | | | X | |
| Overlays – HDG / TRK | | | X | |
| Overlays – Warning Indicator | | X | | |
| Overlays – Height Above Terrain | | | X | |
| Overlays – Data Interface Fail Flag | | X | | |
| Overlays – Special Areas, Air Space | | X | | |
| Overlays – Altitude | | | X | |
| Overlays – Ground speed | | | X | |
| Overlays – A/C Position | | | X | |
| Overlays – Map Mode | | | X | |
| Overlays – Map Type | | X | | |
| Overlays – Jeppesen Map | | X | | |
| Overlays – Terrain Profile | X | | | |

# UH-72A Map / OMMI Fidelity Analysis (Cont)

| Feature Name | Software Fidelity | | | |
|---|---|---|---|---|
| | Not Simulated | Wallpaper Only | Functional Fidelity | Notes |
| Overlays – TRK Line | | | X | |
| Overlays – Range Rings | | | X | |
| Overlays – Compass Rose | | | X | |
| Overlays – Info on Next Waypoint | | | X | |
| Overlays – Waypoint | | | X | |
| Overlays – Next Next Waypoint | X | | | |
| Overlays – Length / Dtk of next leg | X | | | |
| Overlays – ETA of End of Flightplan | X | | | |
| Overlays - Rose | | | X | |
| Overlays – Range Rings | | | X | |
| Overlays – Track Line | | | X | |
| Vector Types – Navigation Vector | | | X | |
| Vector Types – Gnd Vector | | | X | |
| Vector Types - Obstacles | | | X | |
| Vector Types – Gnd Raster | | | X | |
| Vector Types – User Objects | | | X | |
| Terrain Data – Dynamic elev Overlay | X | | | Fixed color assignment |
| Vector Maps - Labels | | | X | |
| Vector Maps – Optimized labels | | X | | |
| Selection - Nav Vector – Master Enable | | | X | |
| Selection - Nav Vector – Controlled Airspaces | | | X | |
| Selection - Nav Vector – Restrictive Airspaces | | | X | |
| Selection - Nav Vector – Enroute Airw ays | | | X | |
| Selection - Nav Vector – Symbols / Runw ays | | | X | |
| Point Display – User Object – User Defined | | | X | |
| Point Display - User Object – Threats / Ranges | | | X | |
| Point Display - User Object – Labels | | | X | FMS Nav Aids, Radar Targets |
| Point Display - User Object - Cached Objects | | | X | |
| DTED Setup | X | | | |
| Terrain Profile – Collision Warning | X | | | |
| Terrain Profile – Profile ahead of A/C | X | | | |
| Terrain Profile – Total Flight Plan Profile | X | | | |
| DTED Profile Setup | X | | | |
| DTED Profile Overlay | X | | | |
| Map Design – Vector map background | | | X | Backgrounds of vector maps. |

# UH-72A Map / OMMI Fidelity Analysis (Cont)

| Feature Name | Software Fidelity | | | |
|---|---|---|---|---|
| | Not Simulated | Wallpaper Only | Functional Fidelity | Notes |
| Database Features – Nav-Points | | | X | |
| Database Features - Towns | | | X | |
| Database Features – User Points | | | X | |
| Database Features – Address | | | X | |
| Database Features – Point of Interest | | | X | |
| Database Access – Point Database Menu | | | X | |
| Database Access –Selection Methods | | | X | |
| Database Access – Sorting & Searching | | | X | |
| Database Access – Search Item Input | | | X | |
| Database Access – User databases | | | X | |
| Database Access - Address | | | X | |
| Database Access – Points of Interest | | | X | |
| Database Access – Flight Track / Record | X | | | |
| User Grid | X | | | |
| Bulls Eye | X | | | |
| Intervisibility | | | X | |
| Intervisibility - Menu | | | X | |
| Recording Events | X | | | |
| Quick Access – Menu1 (Macros, User) | | | X | |
| Quick Access – Menu2 (System) | | X | | |
| Quick Marker / Escape Rings | | | X | |
| Screen Shot Tool | | | X | |
| Camera Pointing | | | X | |
| Camera Pointing/Steering - Menus | | | X | |
| User Setup Menus1 | | X | | Wallpaper of top level menus |
| User Setup Menus2 | X | | | |
| Terrain Warning Setup | X | | | |
| Obstacle Warning Setup | X | | | |
| Air Speed Indication | X | | | |
| HDG / TRK Label | | | X | |
| File Transfer | X | | | |
| Dist / Alt Pos Unit Setup | X | | | |
| Quadview | | | X | |

# *Moving Map Design Approach (Cont)*

- The following new Map Types are currently not supported by SE Core TDB distribution to AVCATT
  - Street Maps (Vector)
  - Jeppesen / Air Navigation Maps (Vector)
  - Geocoding Information (Address & POI Database Query/Search)
- Link will use open source real world data to simulate each of these new map types and capabilities
  - Street Maps - Open Scene Graph / Open Scene Graph Earth with open GIS data
  - Jeppesen / Air Navigation Maps - GeoTIFF maps from FAA
  - Geocoding Information - Geocoder::US 2.0 / TigerLine data from the U.S. Census Bureau
- Map updates for AVCATT will be done offline as part of maintenance / load update activities
- Interface with SE Core to refine future SE Core requirements for producing correlated “for simulation” data

# Moving Map CSC Top-Level Software Overview

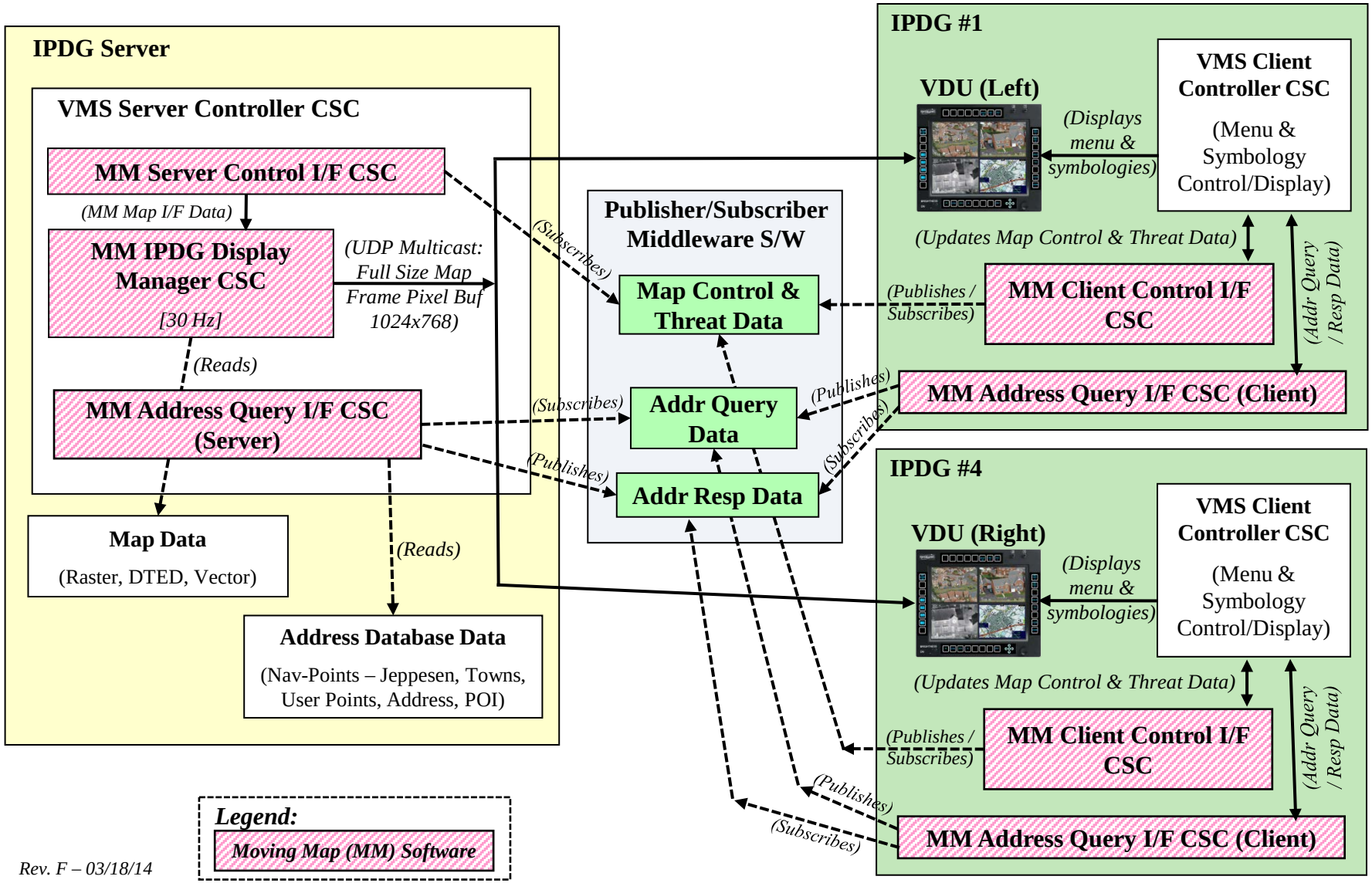


Rev. F – 03/18/14

# *Moving Map CSCs Software Overview - Description*

- The Moving Map CSC consists of 2 major sub-CSCs:
  - Moving Map Control Interface CSC (~6% modified from UH-60M)
    - This is the Moving Map Control I/F code that collect Map Control & Threat Data to build the generic Moving Map Map I/F Data for use by the Moving Map IPDG Display Manager CSC.  It also provides the elevation query response, and screen-to-world/world-to-screen coordinate conversion query responses.
    - For the UH-72A, the map control code is will be developed as part of the IPDG VDU control software.  The Moving Map Control Interface CSC read and converts this data into Moving Map I/F Data format to be process later by the Moving Map IPDG Display Manager CSC.
  - Moving Map IPDG Display Manager CSC (~94% reuse from UH-60M)
    - Moving Map Main code that receives Moving Map Map I/F Data and processes it to display different moving map types:  Raster (CADRG), DTED (TERRAIN), and Vector on the IPDG VDUs.

# *Moving Map IPDG Display Manager CSC Overview*

- Moving Map IPDG Display Manager CSC (on IPDGs)
  - Contains the map application used for the UH-72A S&S configuration
  - Reuse mostly from AVCATT ECP78 UH-60M/CH-47F program
  - Read standard NGA imagery (Raster (CADRG), DTED data produced by SE Core program and from NGA CDs) or new real world open source map data
  - Provides a platform independent API with superset of features to support multiple platforms for the moving map.
  - Supports the following digital map functionalities:
    - Raster (CADRG) map display (2D)
    - DTED (Digital) maps display (2D) using level 1 or 2 data
    - Shaded elevation maps (slope shaded elevation)
    - Zooming, Scaling, Panning, and Orientation controls
    - Elevation Color banding: static (min/max), and dynamic (A/C)
    - Intervisibility (Threat rings)
    - Vector map display (2D) (Open Source software and data)
  - Moving Map 3D map display capability is supported for AH-64D Lot 10 but is not needed for UH-72A

# *Moving Map IPDG Display Manager CSC Overview (Cont.)*

- Moving Map IPDG Display Manager CSC - General Processing
  - Main Application Processing
    - Performs the drawing of OpenGL vertex and texture data
    - Called from the Video Distribution CSC on the IPDG nodes
    - Called at a video rendering rate (30 hertz) during the “Run” Sim state
  - Background Thread Processing
    - Performs data processing operations that exceed what can be processed in a single frame.
    - Performs operations for processing texture and vertex data
    - Performs the disk loading, memory allocation and processing for:
      - Raster tiles
      - DTED elevation data
      - Vector data

# *Moving Map IPDG Display Manager CSC Overview (Cont.)*

- Moving Map IPDG Display Manager CSC - Display Processing
  - Main Application Processing
    - Entries are popped off of Active Data Queue.
    - Map tile texture is bound to geometry.
    - GL Transformation takes place to current eyepoint position
      - 2D Mode transforms are always normal to the polygon surface.
  - Background Thread Processing
    - Cartographic data is loaded from the IPDG disk server
    - The area of coverage is determined based on the current camera eyepoint.
    - The background thread loads the imagery, queries the DTED Database for elevation data and pushes the data onto the Active Data Queue.

# *Moving Map Interfaces*

- The following are the descriptions for Moving Map UH-72A interface:
  - IPDG VMS Client Controller, which runs locally on each VMS IPDG computer (i.e. 1 for co-pilot, 1 for pilot), communicates with VMS Server Controller Server (which runs on IPDG Server) based on user inputs/selections to the Operational Man Machine Interface (OMMI) menu (which runs on the local IPDG VMS Clients) to control the Moving Map frame display generated from the IPDG server.
  - The IPDG VMS Client Controller(s) receive & process VMS inputs from different devices: a VMS Control Unit, VMS Touch Screen(s), and VMS Bezel Buttons. It communicates with the IPDG VMS Server Controller to send the map control commands, threat data, point query, DTED query, and address query to Moving Map Display Manager CSC (which run on the IPDG Server) to update & send out map frame buffer data back to the local IPDG VMS nodes to display map in their VMS Display windows.
  - The local IPDG VMS Client Controller CSC makes C++ calls into Moving Map Client Control I/F CSC (i.e. the set of dynamic shared interface libraries), to communicate with the Moving Map Server Control I/F CSC to control the Moving Map Map display frame buffer output.
  - The IPDG Map Video Server CSC receives the full size Moving Map map display frame buffer, scales down the map display size as needed based on the current video window configuration for each VMS Display Unit, and sends them to the each VMS IPDG Display(s).

# *IPDG CSC Overview*

- The Instrument Panel Display Generator (IPDG) system executes sub-CSCs to perform the following tasks for the UH-72A simulation
  - MIP Display Generation
    - Generates the composite sensor and moving map video for the pilot and copilot Video Display Unit (VDU) displays
    - Performs the pilot and copilot Video Display Unit (VDU) Operational Man Machine Interface (OMMI) menu and renders the VDU sensor symbology overlays
    - Executes / hosts the Moving Map CSC
    - Executes / hosts the Cockpit Avionics Simulation (Thales) for simulating the pilot / copilot PFD/ND, Central Panel Display System (VEMD / CAD), Warning Panel, and Standby Instruments
  - IAT/AVT: Performs Image Auto Tracking using the OCTEC IAT card
  - SVRS: Supplies video images the Sensor Video Recording System (SVRS) via the Ethernet

# UH-72A Lakota Cockpit Displays

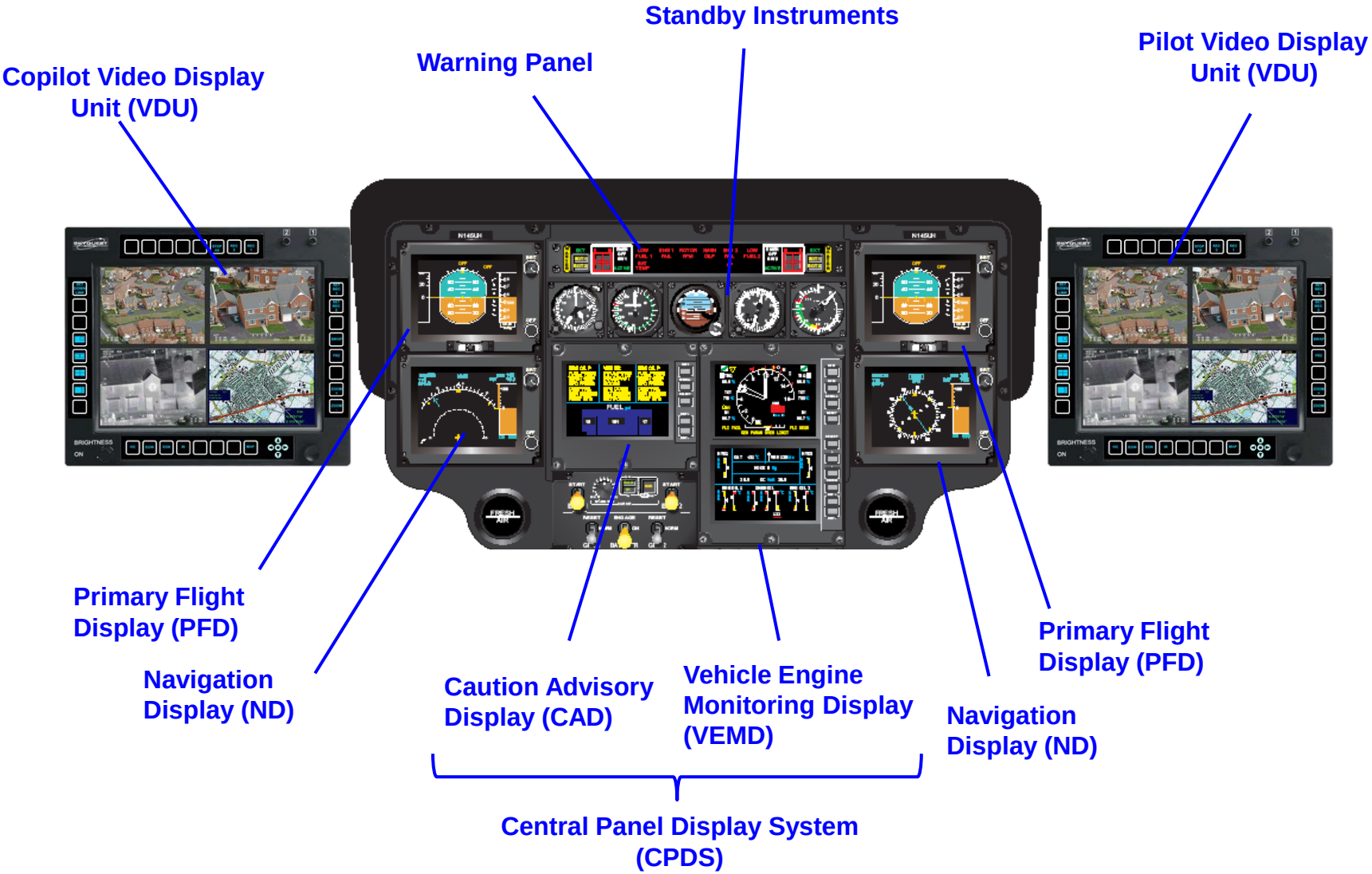

# UH-72A System Diagram (Cont)

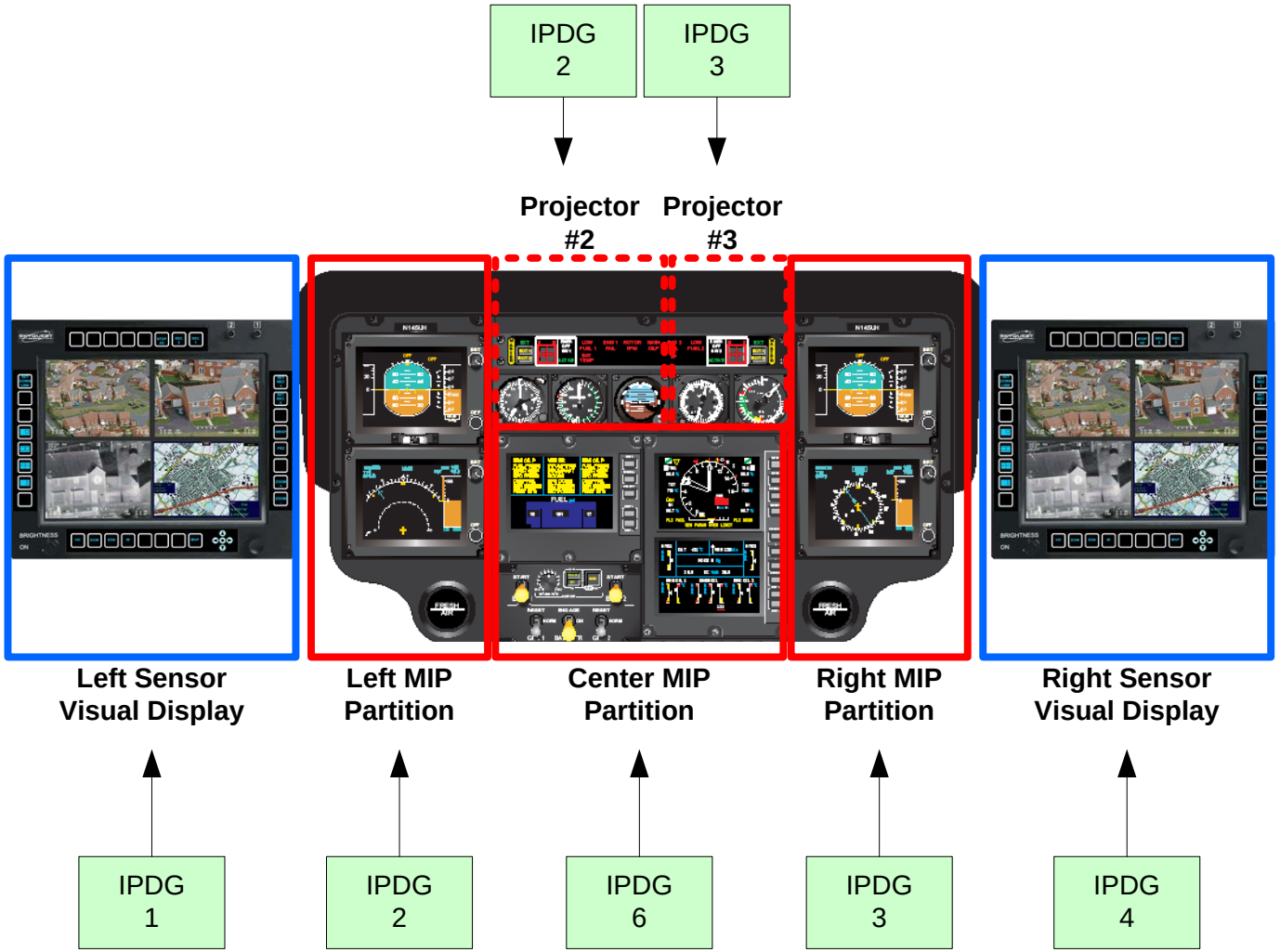

# UH-72A Aircraft System Diagram

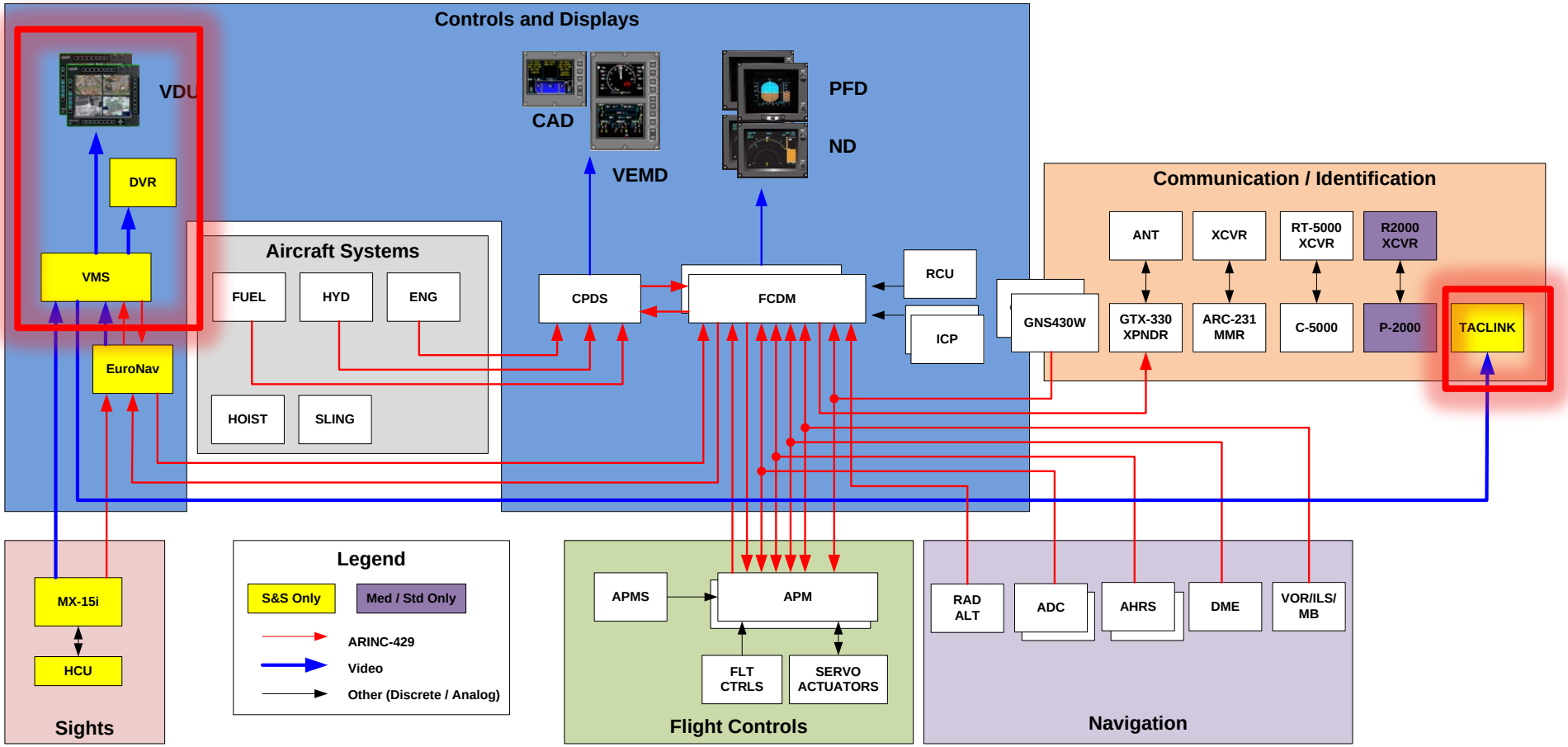


| | |
|---|---|
| ADC | Air Data Computer |
| AHRS | Attitude Heading Reference Set |
| ANT | Antenna |
| APM | Autopilot Module |
| APMS | Autopilot Mode Select Panel |
| CAD | Caution Advisory Display |
| CPDS | Central Panel Display System |
| DME | Distance Measuring Equipment |
| DVR | Digital Video Recorder |
| ENG | Engine Instrumentation |
| FCDM | Flight Control Display Module |
| GNS430W | Garmin GNS430W |
| HYD | Hydraulic System |
| ICP | Instrument Control Panel |
| ILS | Instrument Landing System |
| MB | Marker Beacon |
| MMR | Multimode Radio |
| ND | Navigation Display |
| PFD | Primary Flight Display |
| RADALT | Radar Altimeter |
| RCU | Reconfiguration Control Unit |
| S&S | Security & Support |
| VEMD | Vehicle Engine Management Display |
| VHF | Very High Frequency |
| VMS | Video Management System |
| VOR | VHF Omnidirectional Range |
| XCVR | Transceiver |
| XPNDR | Transponder |

# UH-72A System Diagram

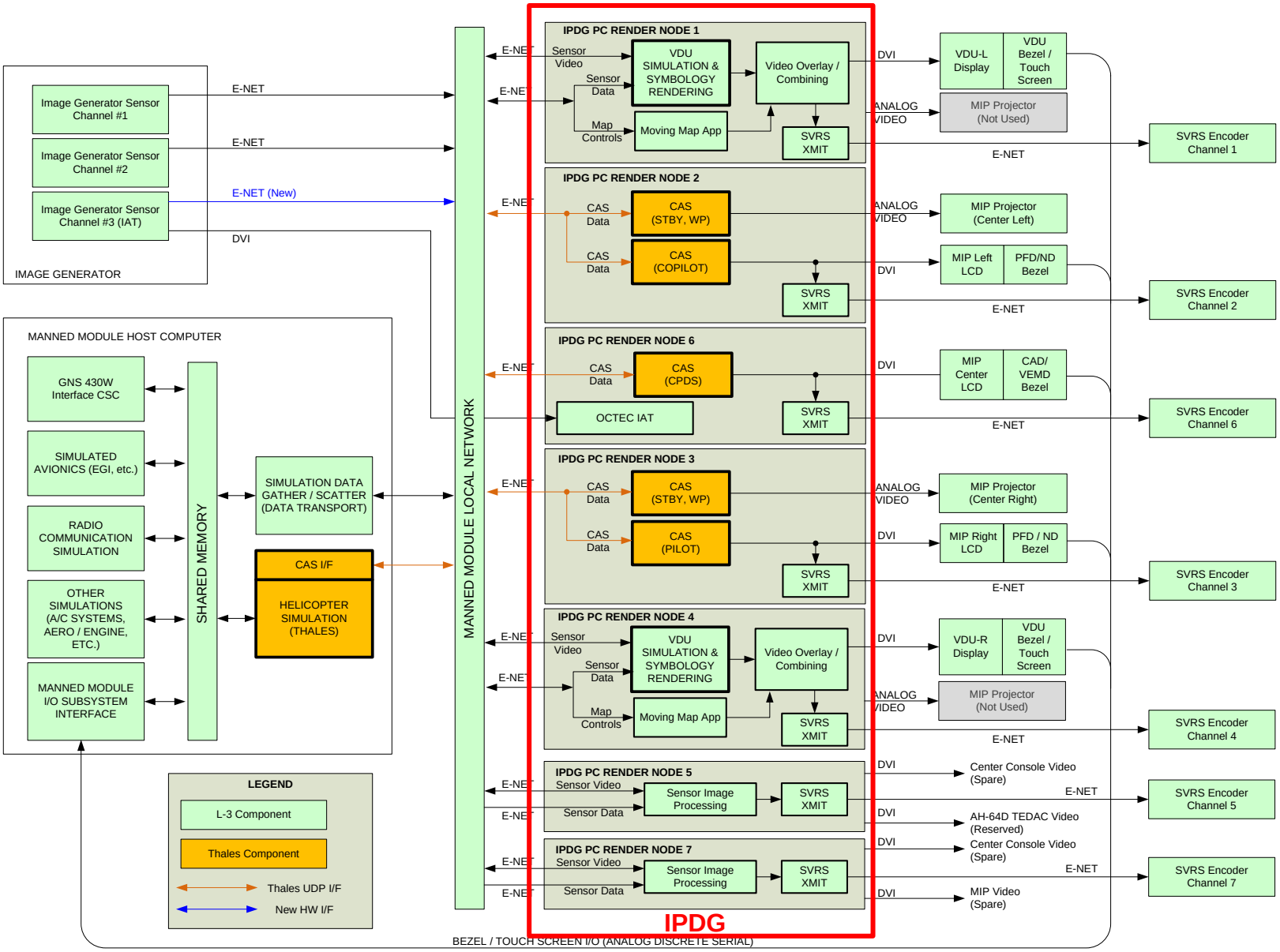

# *IPDG Design Approach*

- The UH-60M IPDG configuration will be used as the baseline for the UH-72A development and modified as follows
  - The AMRDEC FMS/CDU simulation components will be removed and replaced with Thales CAS simulation components on IPDG nodes 2, 3, and 6
    - The Thales CAS simulation will render the displays for the Pilot and Copilot PFD / ND, Central Panel Display System, Warning Panel and Standby Instruments
  - The new VMS Client / VDU application will be hosted on the IPDG and will directly render the VDU video and symbology to the VDU display using composited video for sensor imagery, moving map and OMMI graphics
  - The AH-64D IAT implementation added and re-used as the baseline for the UH-72A and modified for UH-72A specific AVT modes (scene lock, etc.)
  - The IPDG will continue to host the Moving Map application to support generation of map displays for the VDU
  - The IPDG will continue to support transmission of LEVI data to the SVRS channels

# *IPDG Design Approach*

## *Sensor Video Recording System Channel Mapping*

- IPDG / SVRS channel mapping for UH-72A Standard & Medevac configurations will be able to view Pilot / Copilot OTW / NVG video
  - Channels used for MX-15i sensor video on the S&S configuration will be utilized for Pilot / Copilot OTW / NVG video

| Aircraft | Node 1 | Node 2 | Node 3 | Node 4 | Node 5 | Node 6 | Node 7 |
|---|---|---|---|---|---|---|---|
| UH-72A S&S | CPLT VDU | CPLT PFD / ND | PILOT PFD / ND | PILOT VDU | MX-15i FLIR | CPDS (CAD / VEMD) | MX-15i CoTV |
| UH-72A Standard, Medevac | CPLT VDU | CPLT PFD / ND | PILOT PFD / ND | PILOT VDU | PILOT OTW / NVG | CPDS (CAD / VEMD) | CPLT OTW / NVG |

# *Data Transport CSC Overview*

- The Data Transport CSC is a simulation-specific component that provides the interface between the software components within the Manned Module Host simulated aircraft systems and the Instrument Panel Display System (IPDS)

- The Data Transport CSC also includes data transfer between the Thales Helicopter (H/C) Simulation and Thales Cockpit Avionics Simulation (CAS)
  - Handled by Thales using a Thales-controlled UDP socket between the MMHC and IPDS on the MM 10.10.10.x LAN

# Concept of Operation

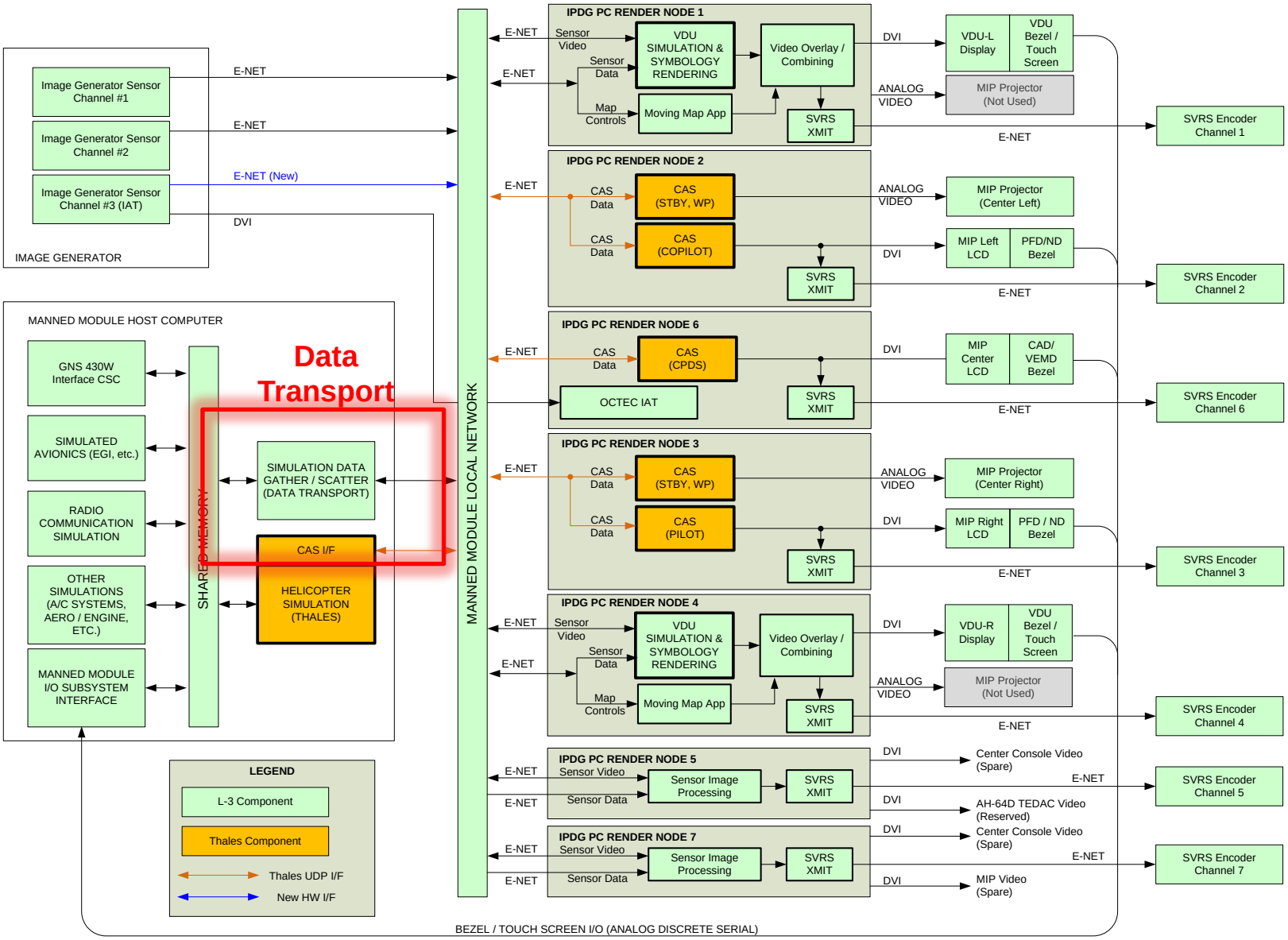

# Context / Interface Diagram

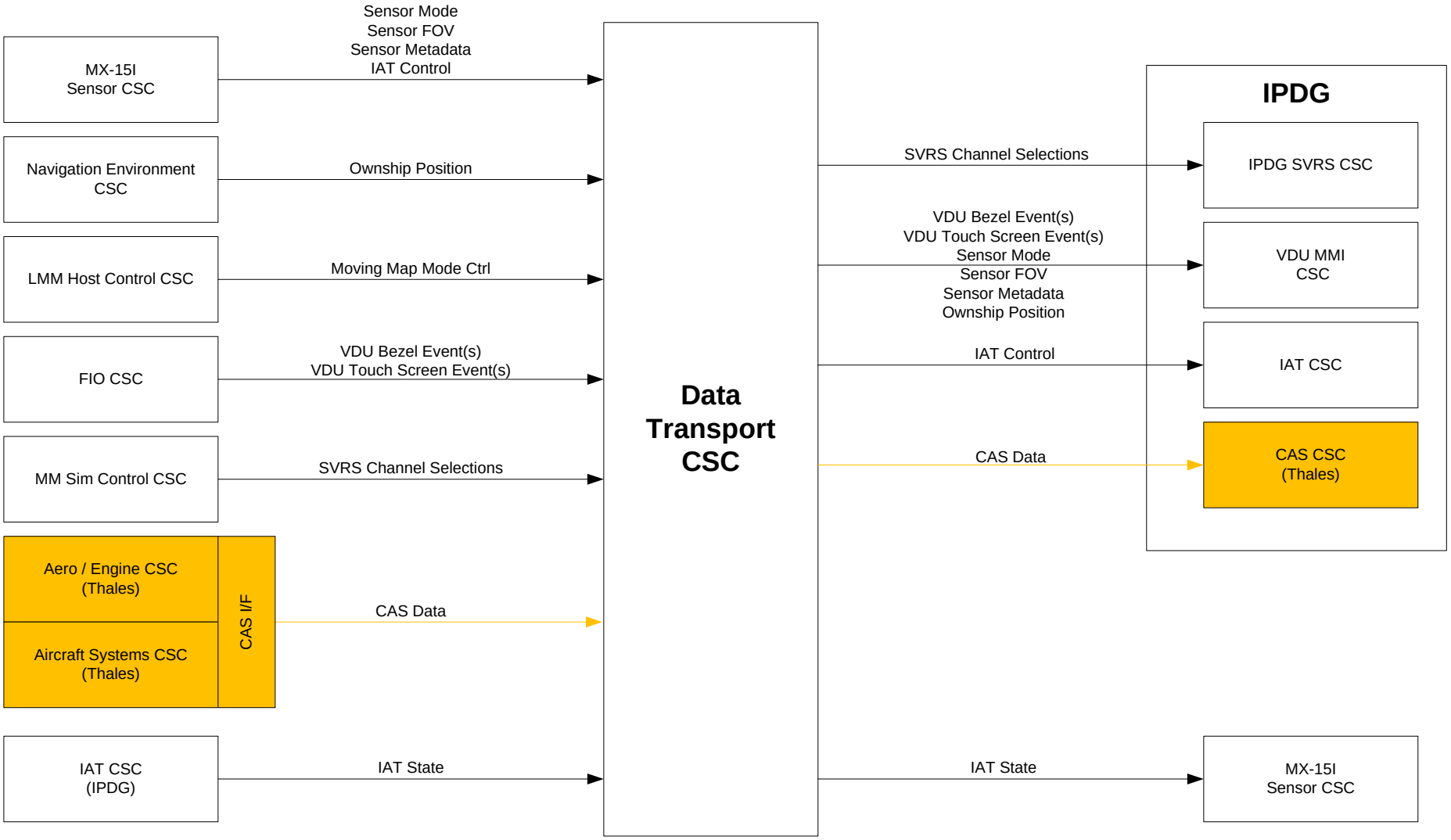

# *Data Transport CSC Design Approach (Cont.)*

- The Data Transport CSC baseline software configuration will be re-used from the AH-64D aircraft configuration
  - Retain s/w architecture, core functionality, and execution rates
  - AH-64D baseline includes support for sensor displays and IAT
  - Modify to export UH-72A specific AVCATT subsystem data from the MM Host computer to IPDGs via UDP data packets
    - Leverages existing code that drives AH-64D panel instruments, configures sensor displays, and controls IAT

- Thales components (Helicopter Simulation and CAS) will communicate directly with one another without intervention of L-3 processes
  - Reduces computational overhead
  - Reduces complexity of ICD development / interface negotiation
  - L-3 will jointly develop a MMHC shared memory ICD for Thales H/C Simulation and CAS Simulation components

# *Navigation Overview*

- AVCATT Navigation CSCs include the following:
  - Navigation Environment CSC
    - Navigation Geography
  - Navigation Instruments CSC
    - Honeywell KRA - 405B Radar Altimeter
    - Air Data Computer (ADC)
    - Attitude / Heading Reference Set (AHRS)
  - Navigation Suite
    - Embedded GPS/INS (EGI) CSC
    - Garmin 430W / Garmin Interface CSC

# UH-72A Aircraft System Diagram

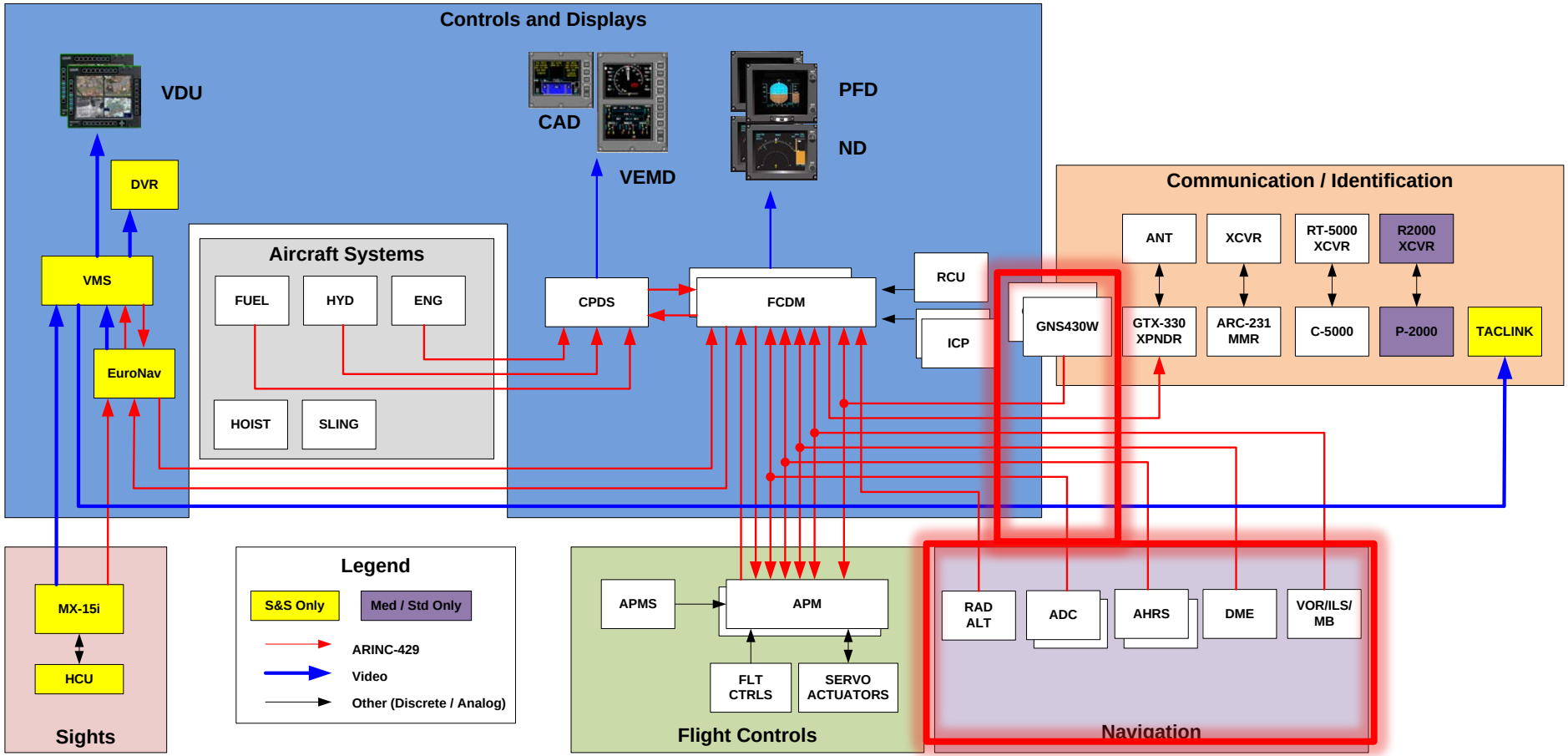


| | |
|---|---|
| ADC | Air Data Computer |
| AHRS | Attitude Heading Reference Set |
| ANT | Antenna |
| APM | Autopilot Module |
| APMS | Autopilot Mode Select Panel |
| CAD | Caution Advisory Display |
| CPDS | Central Panel Display System |
| DME | Distance Measuring Equipment |
| DVR | Digital Video Recorder |
| ENG | Engine Instrumentation |
| FCDM | Flight Control Display Module |
| GNS430W | Garmin GNS430W |
| HYD | Hydraulic System |
| ICP | Instrument Control Panel |
| ILS | Instrument Landing System |
| MB | Marker Beacon |
| MMR | Multimode Radio |
| ND | Navigation Display |
| PFD | Primary Flight Display |
| RADALT | Radar Altimeter |
| RCU | Reconfiguration Control Unit |
| S&S | Security & Support |
| VEMD | Vehicle Engine Management Display |
| VHF | Very High Frequency |
| VMS | Video Management System |
| VOR | VHF Omnidirectional Range |
| XCVR | Transceiver |
| XPNDR | Transponder |

# UH-72A AVCATT System Diagram

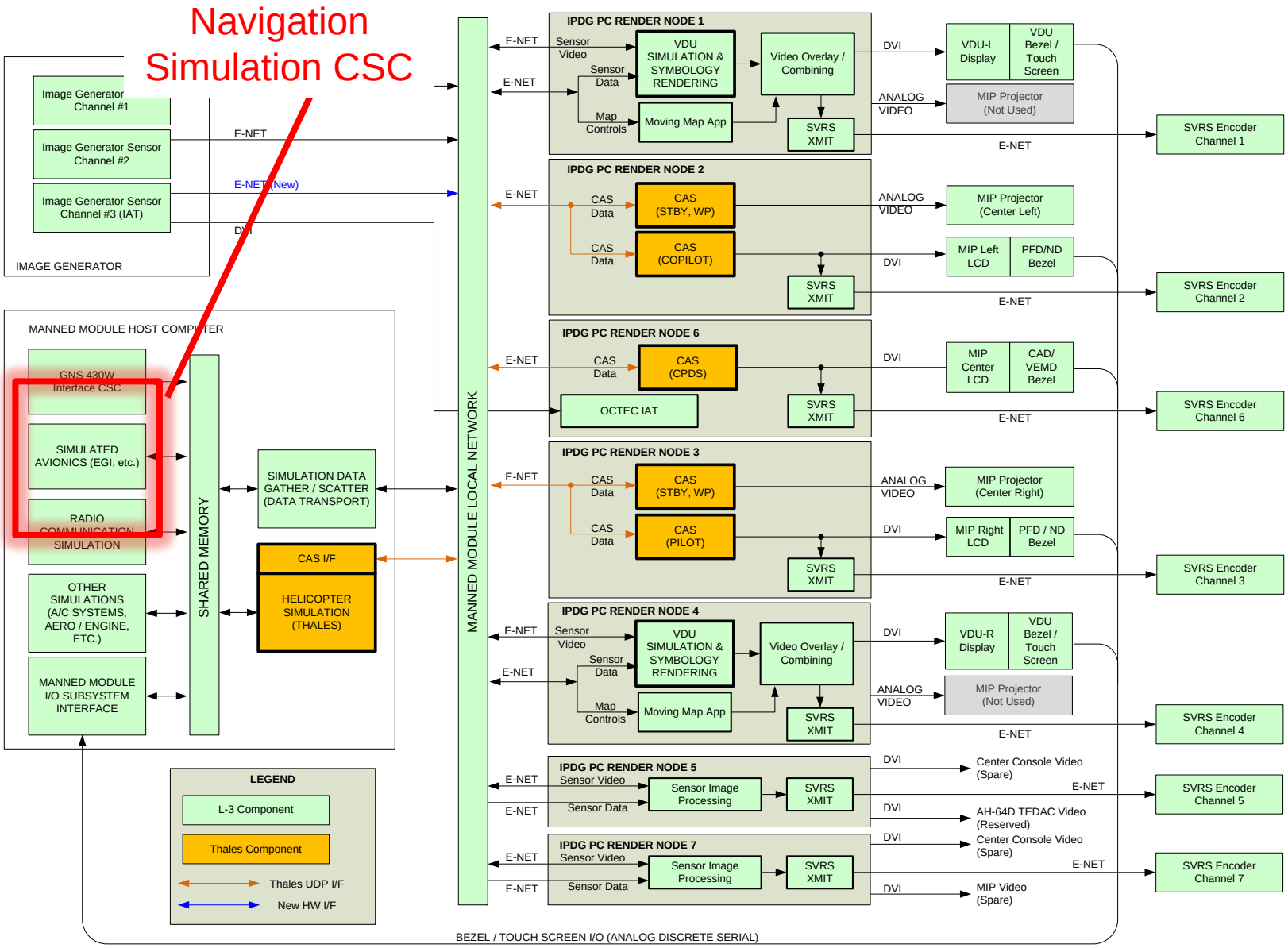

# Navigation Environment CSC

# *Navigation Environment CSC Overview*

- Calculates the Manned Module's position in simulated space
- Keeps track of position in terms of standard World Grid System 1984 Datum (WGS-84) Latitude, Longitude, and altitude.
- Takes the initial position information from the Manned Module Simulation Control CSC and updates it based on the Equations of Motion velocities output from the Aerodynamics and Engines CSC.
- Determines the ownship’s true and magnetic heading.
- Common to all AVCATT manned module aircraft

# Navigation Environment CSC Context / Interface Diagram

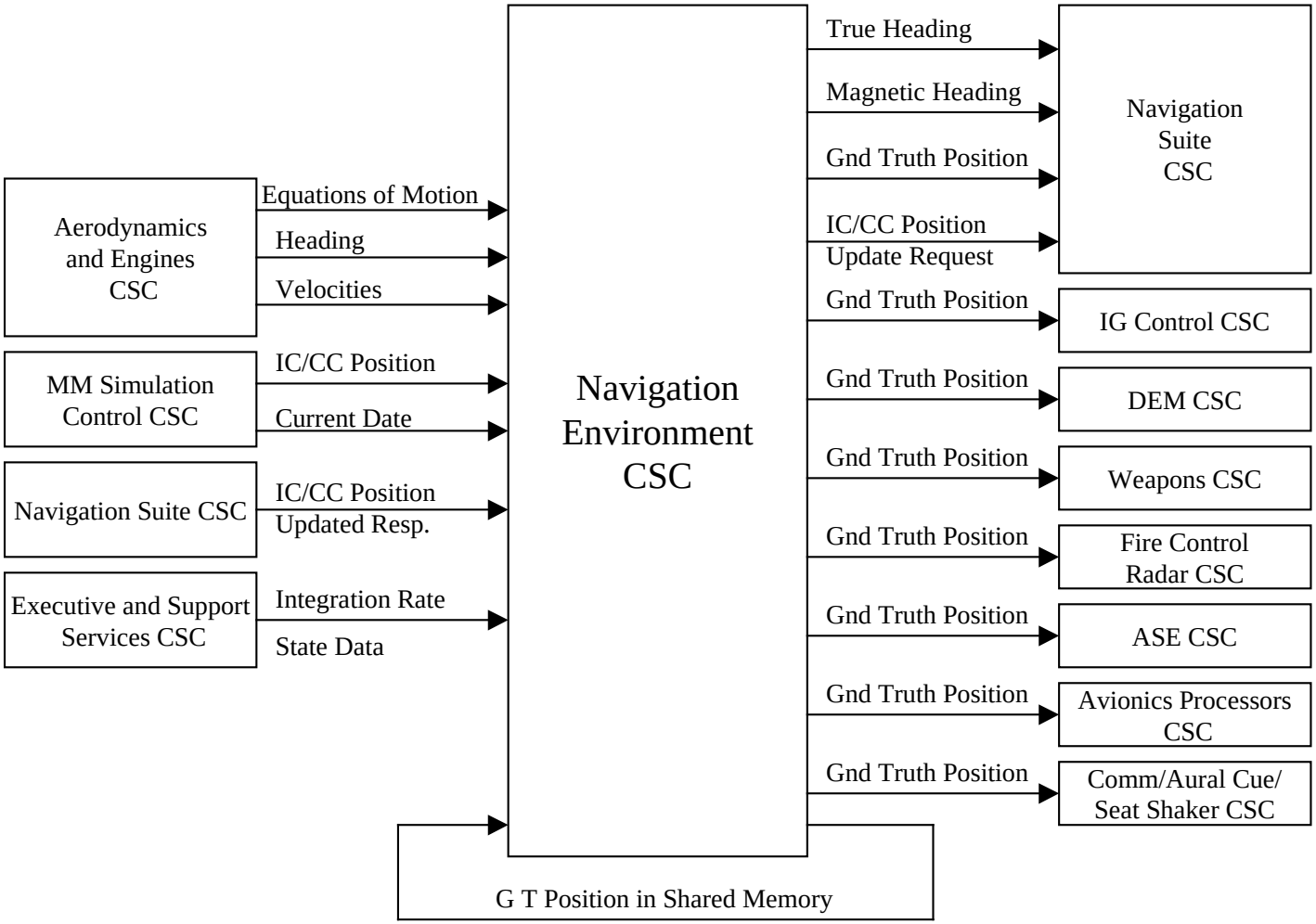

# *Navigation Environment CSC Design Approach*

- Re-use common Navigation Environment simulation software from AVCATT as the UH-72A baseline
  - Retain s/w architecture, core functionality, and execution rates
  - No anticipated software changes for UH-72A implementation

# Navigation Instruments CSC

# *Navigation Instruments Aircraft Overview*

- Radar Altimeter
  - The Radar Altimeter uses a tight vertical radar beam that the aircraft emits in order to measure the distance to the terrain below.
  - Altitude is typically valid in a range up to 1500 ft AGL
  - A low altitude marker / bug can be set to inform the pilot if the aircraft is flown below the set altitude
  - The Decision Height setting is used to set altitude markers on UH-72A (Navigation Display Control Panel – Wallpaper)
- Air Data Computer (ADC)
  - The aircraft Air Data Computer (ADC) senses and computes the following aircraft state parameters
    - Side Slip Angle
    - Longitude Airspeed
    - Latitude Airspeed
    - Total Airspeed
    - Ambient Pressure
    - Ambient Temperature
    - Air Density Ratio

# *Navigation Instruments Aircraft Overview (Cont.)*

- AHRS
  - The AHRS uses solid-state gyroscopes, accelerometers and magnetometers to sense or compute aircraft state data for body angles, rates / velocities, and accelerations
  - AHRS data is used by other on board control and display systems
    - Primary Flight Display
    - Navigation Display
    - Autopilot Module

# *Navigation Instruments CSC Overview*

- Radar Altimeter
  - The radar altimeter uses the helicopter's Height above Terrain (HAT) received from the IG Control CSC to compute the simulated radard altitude
    - Offset from bottom of fuselage to HAT is subtracted from altitude for each aircraft.
  - The radar altimeter simulation initiates an alert to inform the pilot if the aircraft is flown below set altitude (Decision Height)
- Air Data Computer
  - The Air Data Computer (ADC) simulation uses data from the Navigation Environment CSC to computer barometric altitude, air termperature(s), and air speed
- Attitude / Heading Reference Set (AHRS)
  - The AHRS simulation uses data from the Navigation Environment CSC and Aero / Engine CSC to computer aircraft translational and rotational accelerations, then computes aircraft velocities and attitude angles.

# Navigation Instruments CSC Context / Interface Diagram

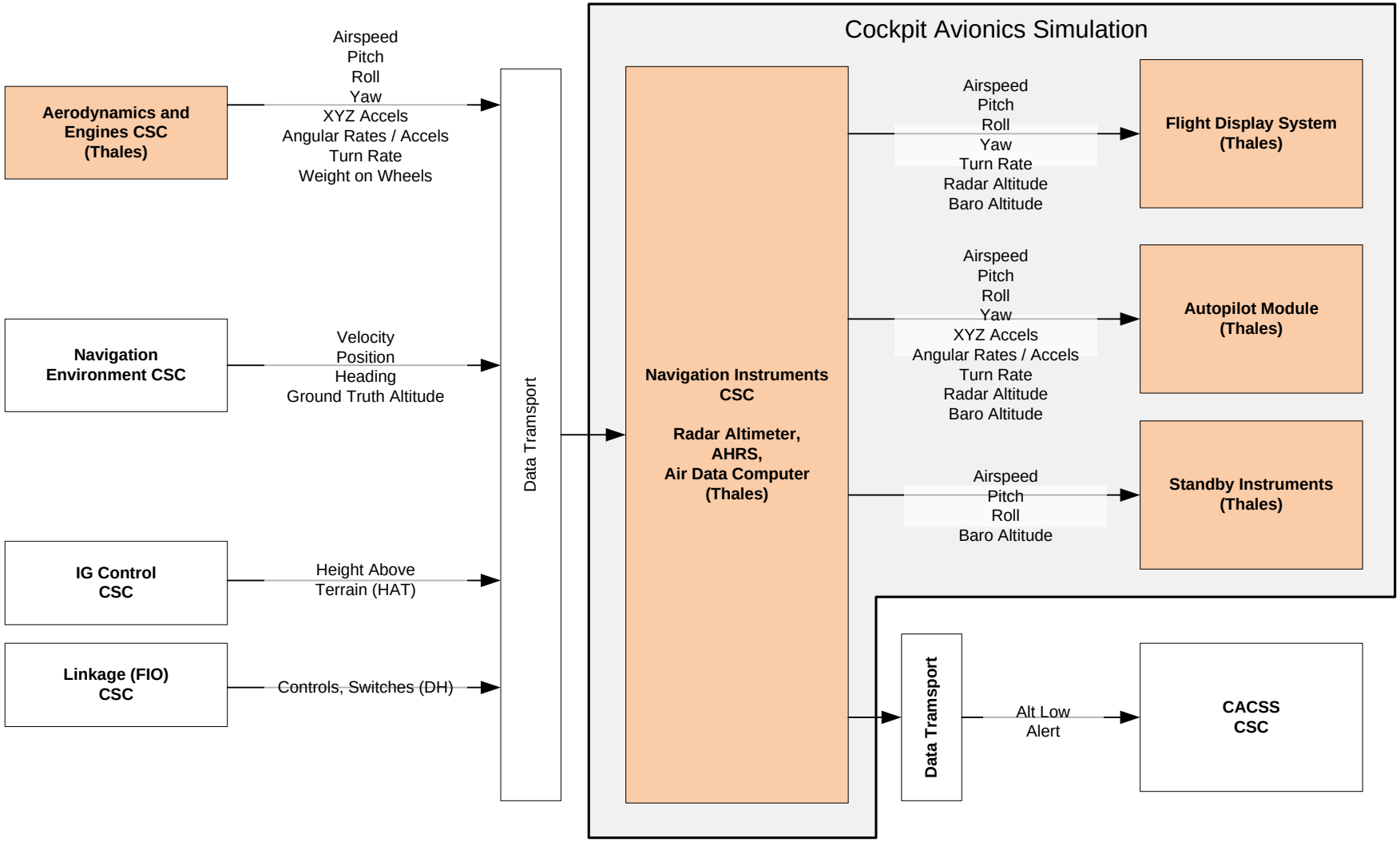

# *Navigation Instruments CSC Design Approach*

- Use the Navigation Instruments component within the Thales-supplied EC145 Cockpit Avionics Simulation to provide the required functionality
  - Radar Altimeter
  - Air Data Computer
  - Attitude / Heading Reference Set (AHRS)
- Retains the interfaces and timing between Thales avionics components and Thales Display components
- AVCATT Data Transport interfaces will be created to provide the Thales avionics components with the required aircraft state data (see Data Transport CSC briefing)

# Navigation Suite (EGI)

# *Navigation Systems (EGI) Aircraft Overview*

- The UH-72A aircraft does not incorporate a standalone EGI
  - The primary navigation sensors of the UH-72A include the Garmin GNS430W (includes an EGI) integrated navigation system, AHRS, ADC, Radar Altimeter, and radio navigation equipment (not simulated for AVCATT)

- The EGI is capable of providing outputs of linear and angular acceleration, linear and angular velocity, position, attitude, magnetic and true heading, altitude, body angular rates, time tags, and UTC synchronized time.

# *EGI CSC Overview*

- The EGI simulation computes navigation solution data for Inertial Navigation Unit (INU) Only, GPS Only and blended GPS/INU modes of operation
- The INU portion of the EGI simulation will not be used for the UH-72A simulation
  - The AVCATT EGI model will be used to provide the stimulated Garmin GNS430W with the GPS data normally computed internally by the Garmin 430W
- A single instance of the EGI simulation will be used to drive both Garmin 430W systems
- Satellite loss and signal loss effects can be controlled from BMC by setting GPS jamming state and GPS satellites to track.
- The UH-72A EGI simulation model will default to “power on” and “aligned / operational”

# EGI CSC Context / Interface Diagram

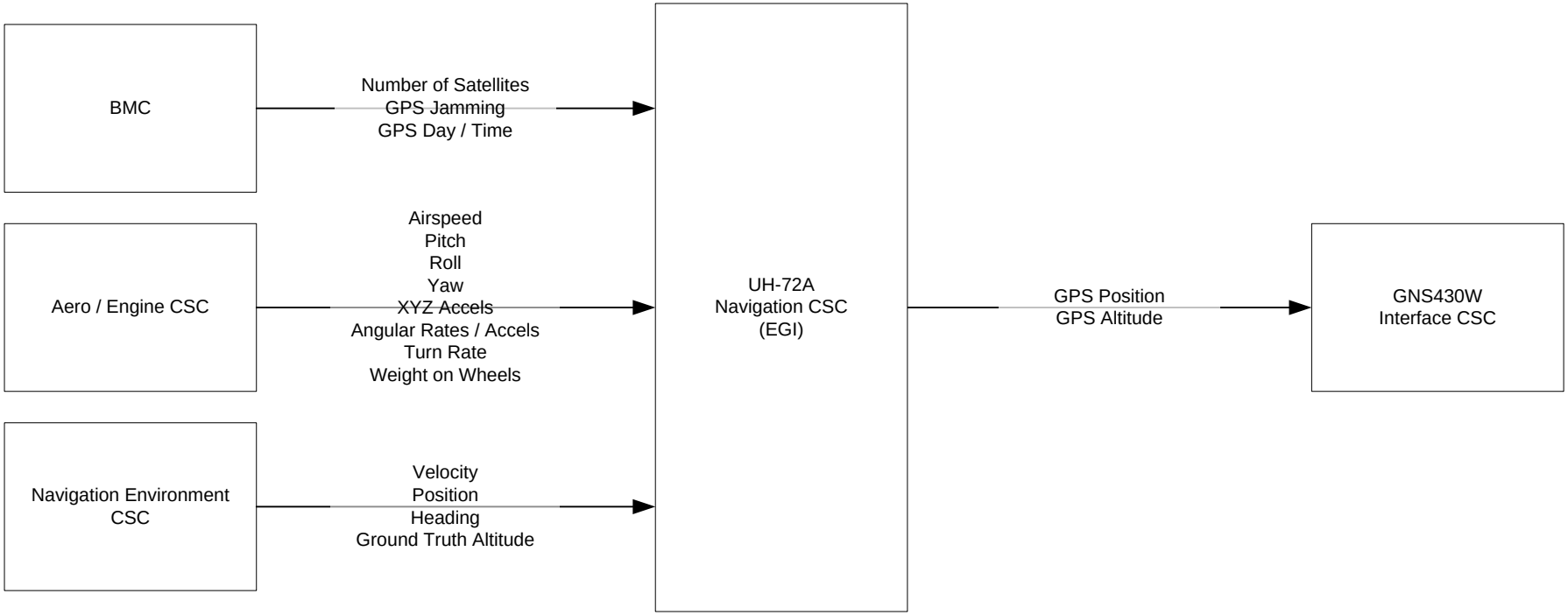

# *EGI CSC Design Approach*

- Re-use EGI simulation software from AVCATT UH-60M baseline
  - Retain software architecture, core functionality, and execution rates
  - Data exported from the EGI simulation will be provided to the GNS430W by the Garmin Interface CSC (new)

# Navigation Suite
# (Garmin 430W / Garmin Interface CSC)

# *Garmin 430W Aircraft System Overview*

- The Garmin 430W is an integrated Navigation / Communications system device used on the UH-72A Lakota
  - Integrated GPS receiver
  - Moving Map
  - Route Navigation
  - VHF Communications

- Dual GNS430W configuration used on the ARNG UH-72A Lakota
- The Garmin 430W has a built-in LCD display for direct viewing of Garmin display pages
- The Garmin 430W interfaces with the Central Panel Display System (CPDS) to allow waypoints entered on the Garmin 430W to be displayed on the CPDS Navigation Display (ND)
- The Garmin 430W operation is supported by two front panel loadable data cards
  - NavData® Card – Radio Navaids, Airports, Terminal Area Procedures (SIDS, STARS)
  - Terrain Data Card – Basemap, DTED, Obstacles

# *Garmin Interface CSC Design Approach*

- The AVCATT UH-72A MM configuration uses two stimulated Garmin 430W devices to provide full fidelity of the Garmin 430W
  - Garmin provides a COTS “for simulation” Garmin 430W version
  - For simulation version uses flight hardware with additional interfaces to allow external simulations to interface with the Garmin 430W
    - Simulated aircraft position
    - Annunciators
    - Waypoint Data

- A new Garmin 430W Interface software component will be created to transfer data between the Garmin 430W and other simulation components
  - Navigation Systems (aircraft state data)
  - Radio Communications
  - Central Panel Display System

- Radio navigation (VOR/ILS, DME, etc.) is not supported per the FA

# *Garmin Interface CSC Design Approach (Cont.)*

- Initial versions of the NavData and Terrain Data cards will be provided at AVCATT installation

# Garmin Interface CSC Concept of Operation

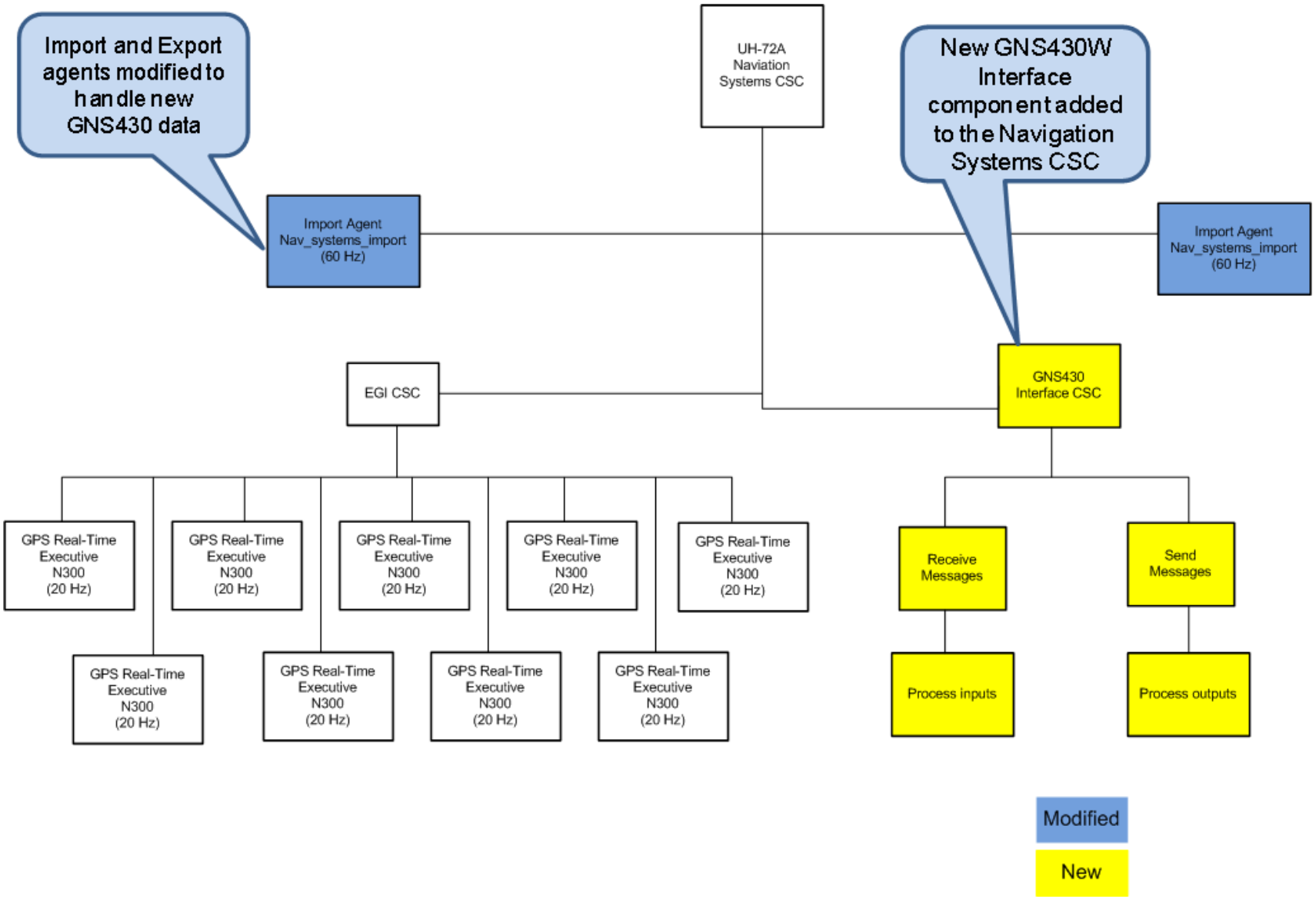

# Garmin Interface CSC Context Diagram

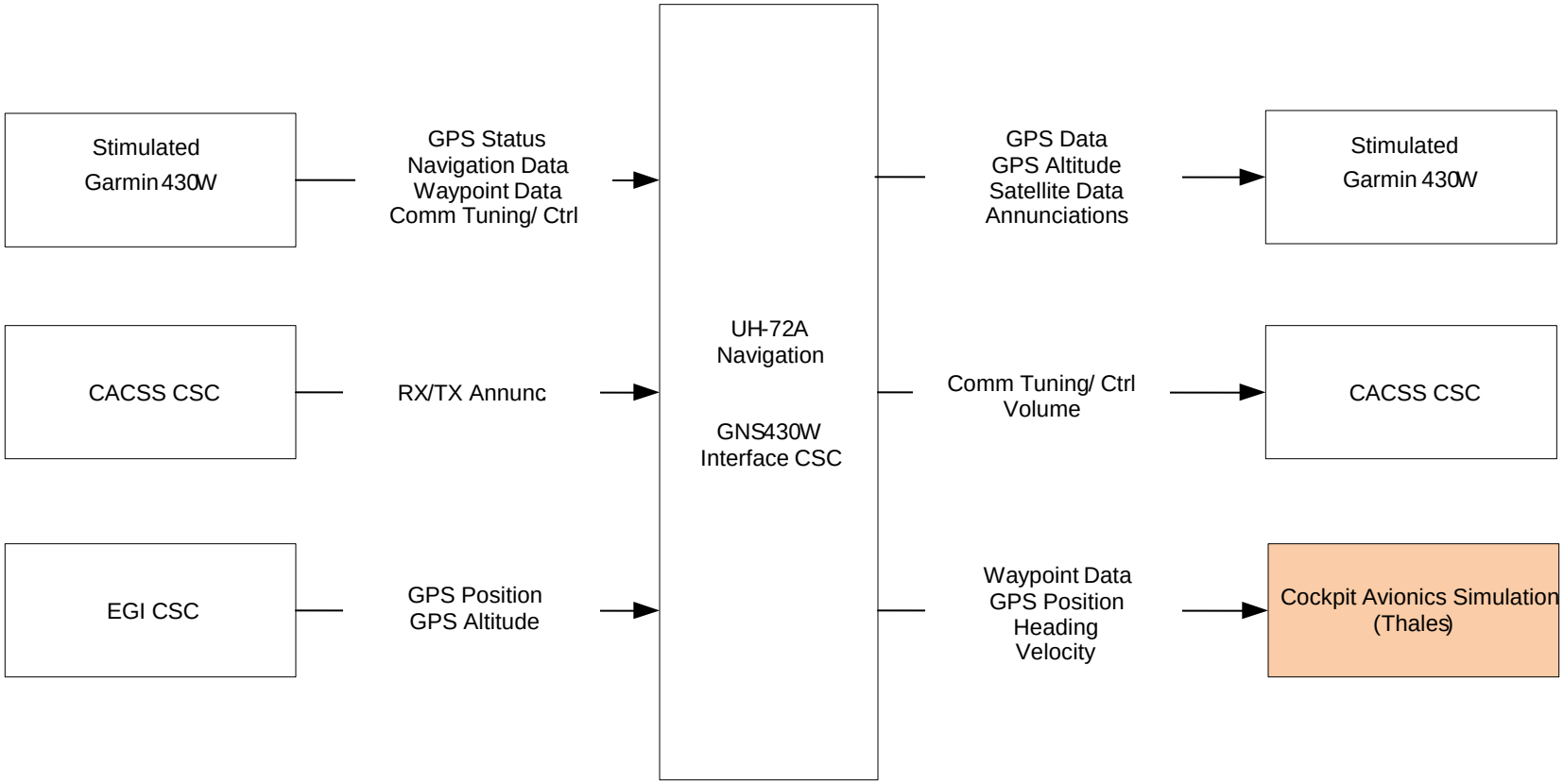

# *FIO CSC Overview*

- The Federated Input/Output (FIO) CSC handles digital/analog I/O from the simulated cockpit
  - Main Instrument Panel
  - Center Console
  - Overhead Console
  - Sensor Control Grip
  - Search Light Control Grip
- The FIO system collects and distributes data to/from the Manned Module Host computer
- Each Aircraft type has a unique FIO configuration
- The FIO Hardware communicates with the Manned Module Host computer via a RS-422 serial interface
- FIO CSC has grown to support hardware via RS-232 interface
  - Video Display Unit (VDU)
  - GNS430W
  - Garmin GTX330
  - ARC-231 Fill Panel
  - C-5000
  - P-2000

# *FIO Concept of Operation*

- FIO Board to Mnemonic (Shared Memory)
  - Linkage requests HW state changes
  - Input buffer is created (IRN , new value)
  - Control list is updated using the Input buffer
  - Control list used to update the mnemonics for the simulation models.

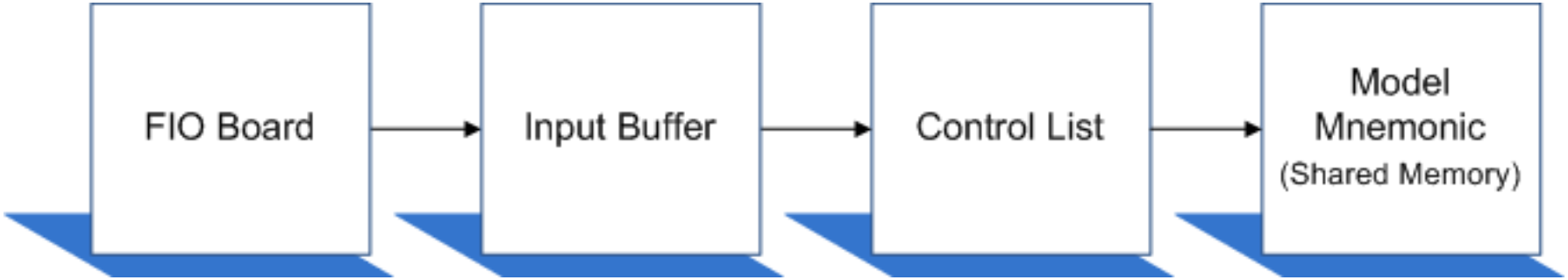

# *FIO Concept of Operation*

- Mnemonic(Shared Memory) to FIO Board
  - Values examined
  - Deltas identified
  - Indicator list used to create the output buffer ( IRN, value)
  - Data transferred to HW

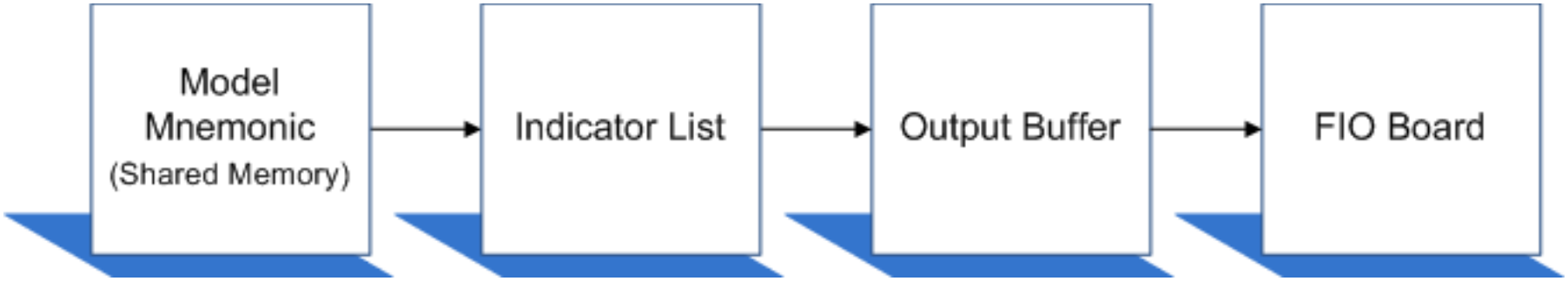

# FIO Context / Interface Diagram

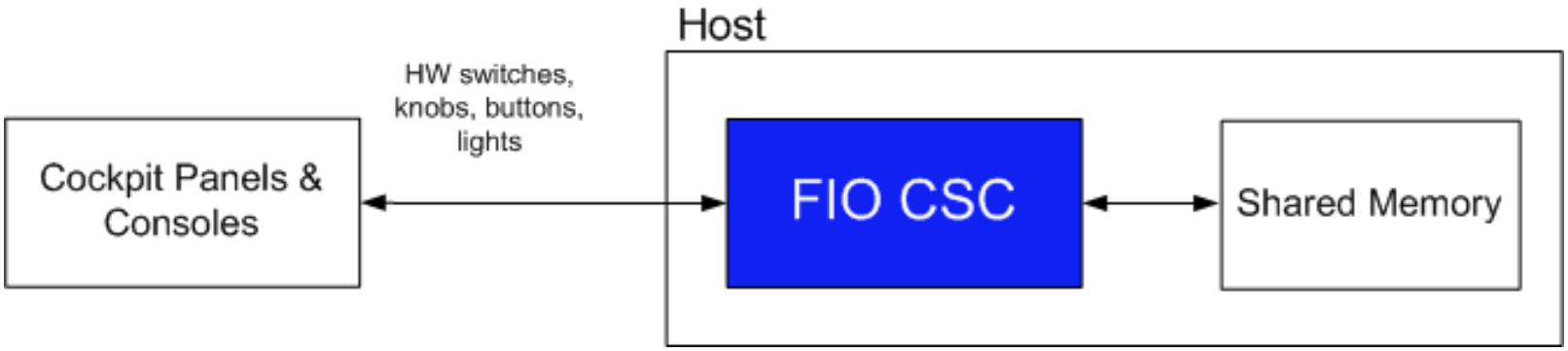

# *FIO Design Approach*

- FIO is 100% reuse of the existing AVCATT code
- UH-72A FIO code will be auto-generated using existing FIO code generation tool-set and I/O definitions from the Fidelity Analysis and hardware ICDs
- RS-232 serial interface code will be leveraged from AVCATT UH60M

# *Aircraft Overview*

- The UH-72A is based on the EC-145 twin engine helicopter featuring
  - Four bladed hingeless main rotor, two bladed tail rotor
  - Hydraulically boosted flight controls with Automatic Flight Control System (AFCS) and Auto-Pilot
    - Series Pitch , Roll, and Yaw Stability Augmentation System (SAS) Smart Electro-Mechanical Actuators (SEMA)
    - Parallel Actuators provide trim and force feel
    - Auto Pilot Mode Selector Panel (APMS)
  - Digital Flight and Engine Instrument Displays with standby back up instruments
  - Digital Avionics and Navigation System

# UH-72A Aircraft System Diagram

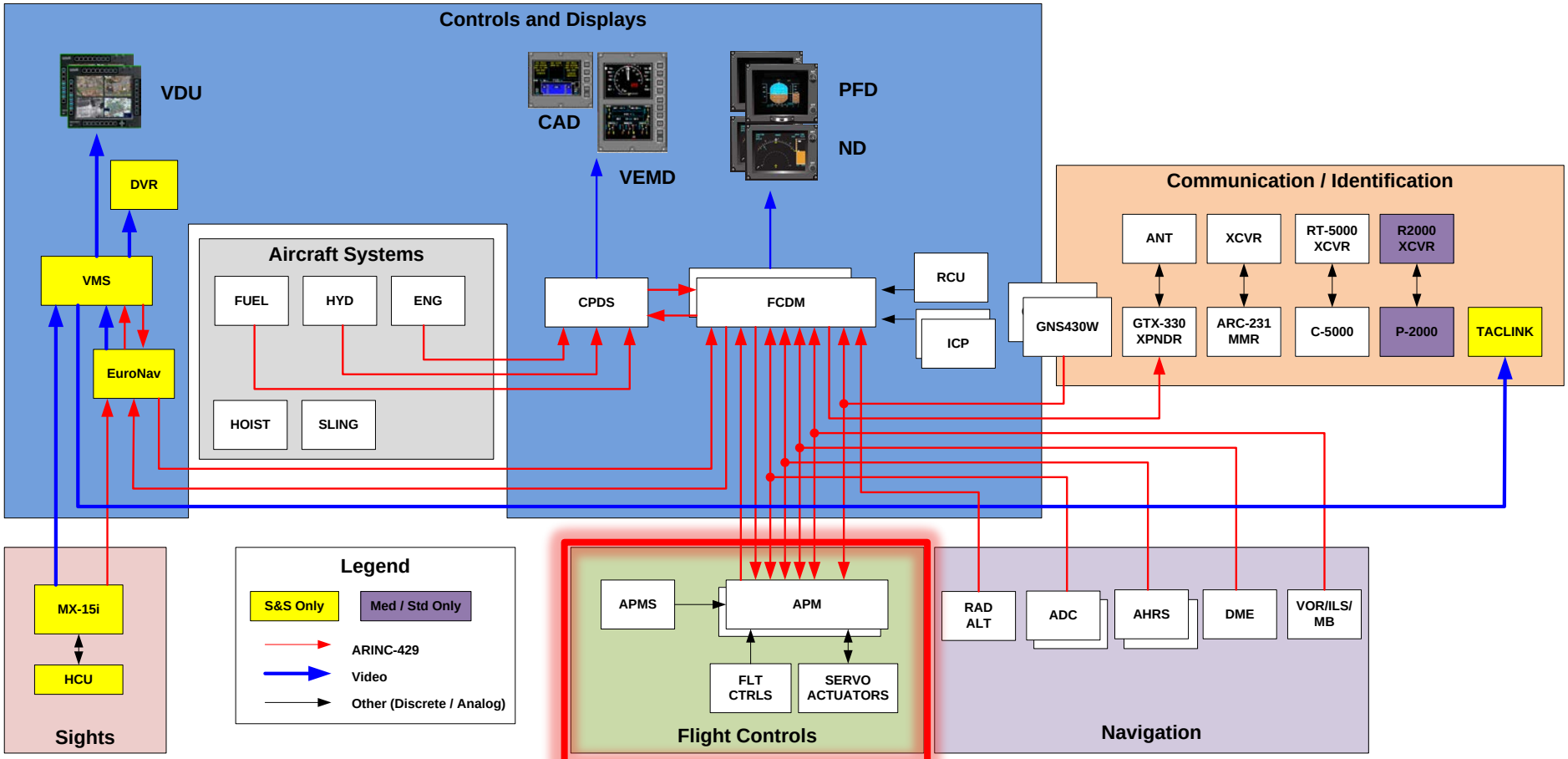


| | |
|---|---|
| ADC | Air Data Computer |
| AHRS | Attitude Heading Reference Set |
| ANT | Antenna |
| APM | Autopilot Module |
| APMS | Autopilot Mode Select Panel |
| CAD | Caution Advisory Display |
| CPDS | Central Panel Display System |
| DME | Distance Measuring Equipment |
| DVR | Digital Video Recorder |
| ENG | Engine Instrumentation |
| FCDM | Flight Control Display Module |
| GNS430W | Garmin GNS430W |
| HYD | Hydraulic System |
| ICP | Instrument Control Panel |
| ILS | Instrument Landing System |
| MB | Marker Beacon |
| MMR | Multimode Radio |
| ND | Navigation Display |
| PFD | Primary Flight Display |
| RADALT | Radar Altimeter |
| RCU | Reconfiguration Control Unit |
| S&S | Security & Support |
| VEMD | Vehicle Engine Management Display |
| VHF | Very High Frequency |
| VMS | Video Management System |
| VOR | VHF Omnidirectional Range |
| XCVR | Transceiver |
| XPNDR | Transponder |

# *CSC Overview*

- The Flight CSC simulates aircraft handling characteristics and coupled own-ship flight performance and includes the following sub-CSCs
  - Aero/Engines CSC
  - Automated Flight Controls CSC
  - Miscellaneous Aero / Engine CSC
  - Electronic Control Loading (ECL) CSC

- The Aero / Engines CSC and Automated Flight Controls CSC are components of the Thales EC145 Helicopter Simulation
  - The Helicopter Simulation will be hosted on the AVCATT MM Host Computer
  - L-3 will provide the software interface between the for Thales Helicopter Simulation flight model and L-3 CSCs

# *UH-72A Design Approach (Cont.)*

- The AVCATT UH-72A Aero / Engine / Flight Control functionality will be based on software from the Thales FAA Level 6 Flight Training Device “Helicopter Simulation”

- Thales / L-3 are jointly developing an ICD for data transmitted between L-3 CSCs and the Helicopter Simulation
  - ECL
  - FIO
  - DEM (IC, Environment Current Conditions)
  - Navigation Environment
  - Aircraft Systems (Fuel, Sling, Hoist, Water Bucket)

- The baseline ICD is based on the existing Thales EC-145 simulation ICD with modifications for UH-72A capabilities

- The UH-72A Miscellaneous Aero / Engine CSC will be reused from the UH-60M baseline

# *UH-72A Concept of Operation*

- Aero / engine / flight control model will run at 60Hz

- Aero / Engine CSC will have the typical AVCATT training mission features:
  - Mission Initial Conditions – Set airspeed, altitude, ambient temperature and position
  - Freeze – Flight freeze, speed freeze, altitude freeze
  - Snapshot Save/Reset & Crash Recovery
  - Shutdown or Reset at anytime
  - Typical AVCATT malfunctions:
    - Chips Main Transmission

- The Aero / Engine CSC will interface with the Aircraft Systems CSC to receive Weight & Balance information related to
  - Sling Load – Including Water Bucket
  - Hoist Load
  - Fuel

# UH-72A Concept of Operation (Cont)

- The Automated Flight Controls CSC will simulate the SAS and AP as always ON
- The Automated Flight Controls CSC will simulate the autopilot modes required by the Fidelity Analysis
  - NAV (coupled to the Garmin)
  - HDG (capture / maintain commanded heading)
  - ALT & ALT A (capture / maintain commanded altitude)
- The Automated Flight Controls CSC will respond to the following cyclic switches
  - BEEP TRIM
  - RESET
  - Force Trim Reset (FTR)
  - Autopilot / Model Decouple (AP/MD DCPT)
- APMS panel
  - HDG, NAV, ALT A, & ALT active w/ lights

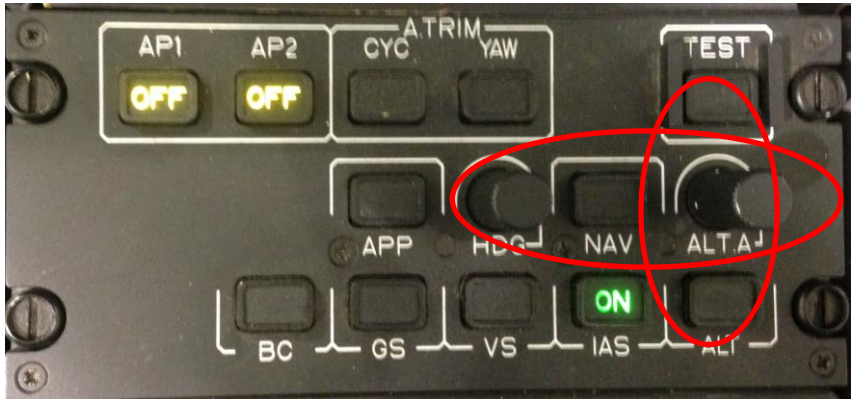


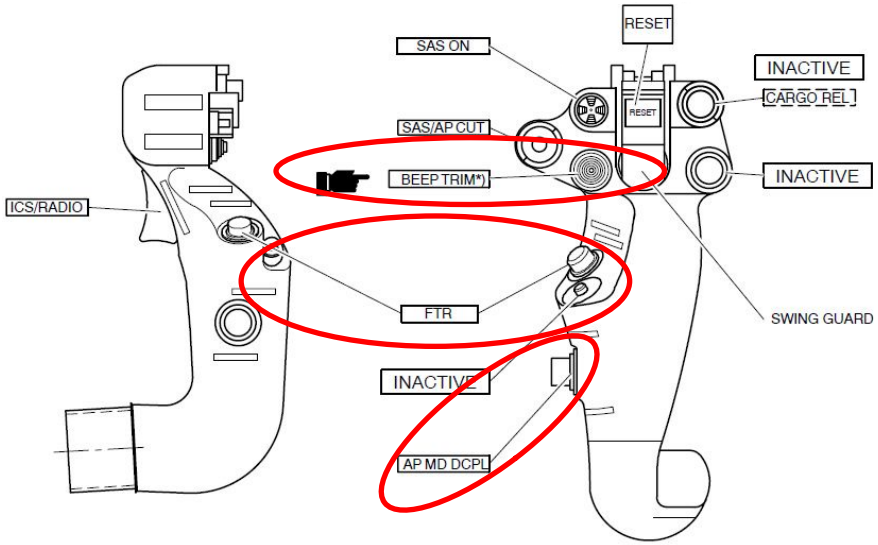

# UH-72A Context Diagram
# Aero / Engine / Auto Flight

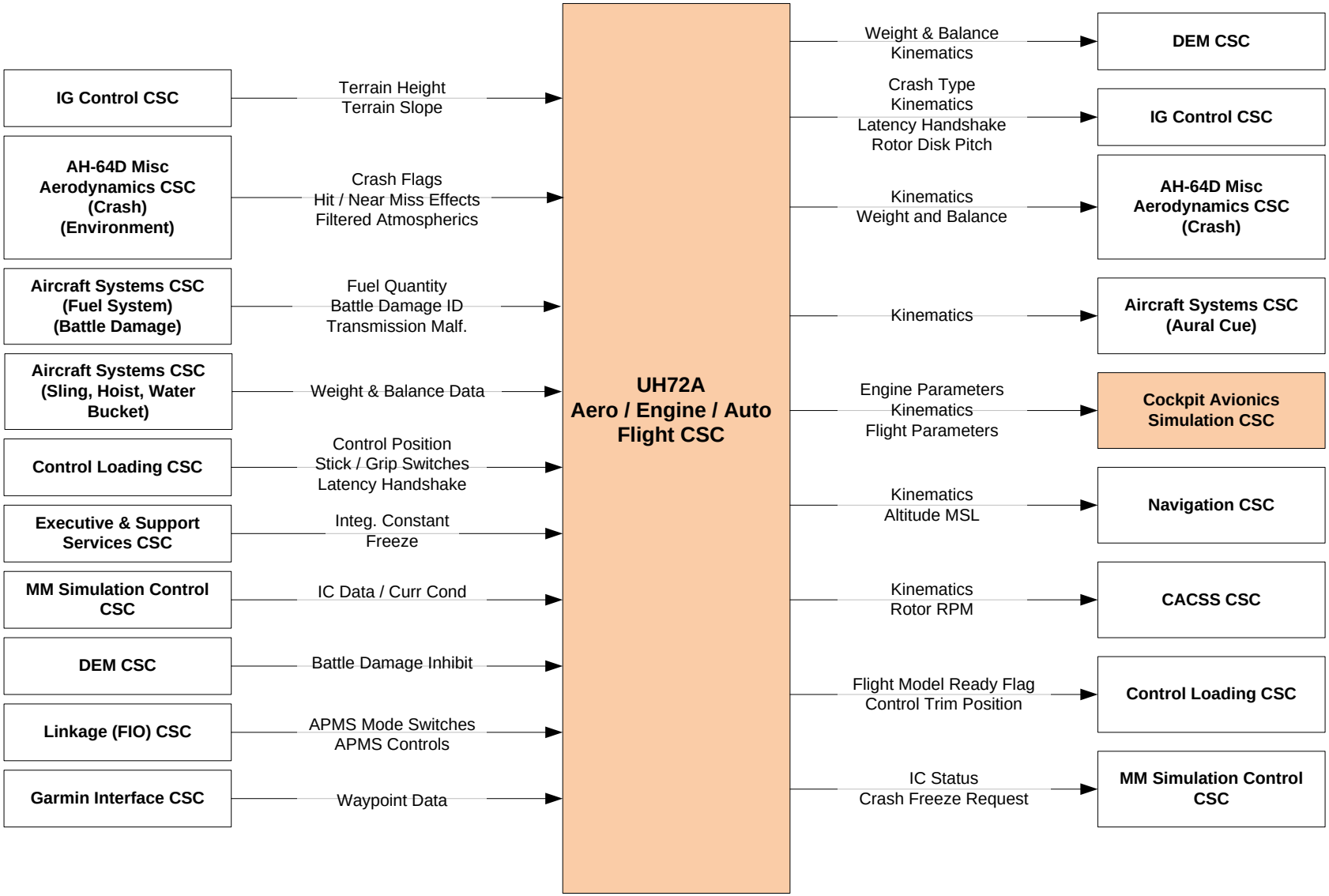

# UH-72A Context Diagram
# Miscellaneous Aero / Eng CSC

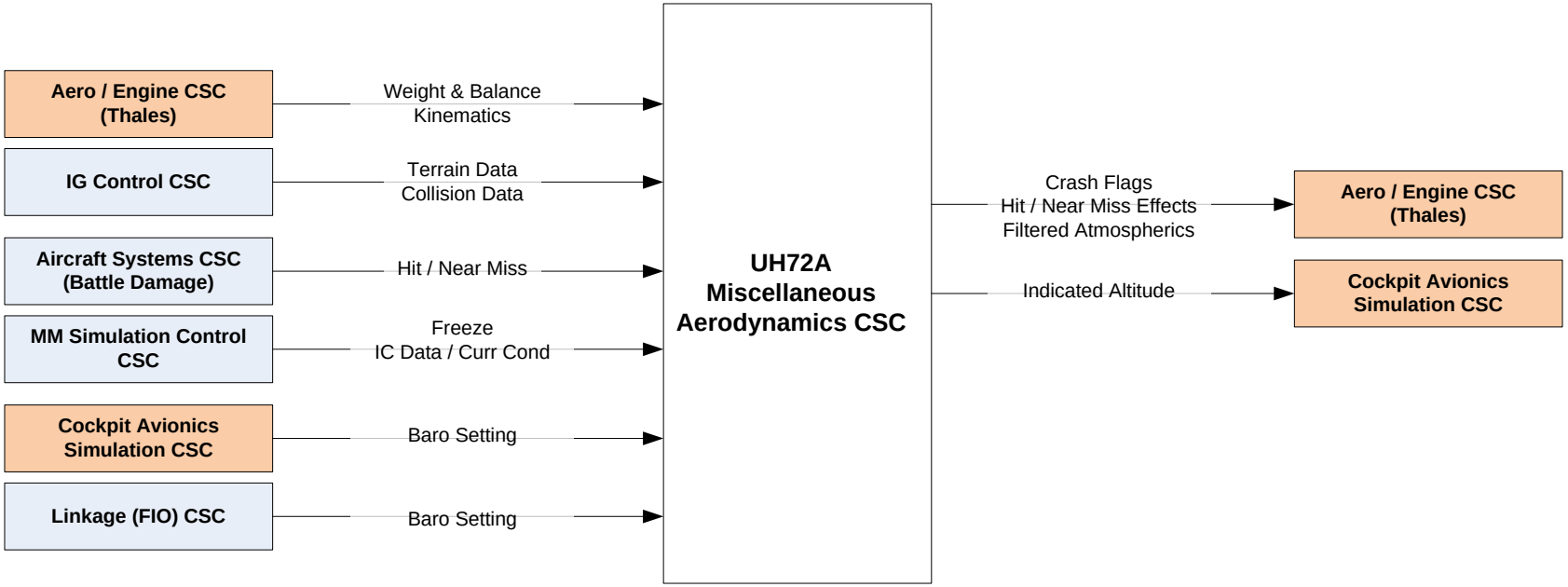

# *Aircraft Overview*

- Flight Controls on the UH-72A have hydraulically powered boost actuators to the main and tail rotor, with longitudinal and lateral cyclic sticks, directional pedals, and collective levers providing input
  - Pilot and copilot controls mechanically connected.
  - Pilot/copilot inputs transmitted to boost actuators via flexball push-pull cables.
  - Parallel actuators for each cyclic axis provide artificial feel breakout and force gradient – Force Trim Release (FTR) allows re-reference of trim detent.
    - Cyclic travel limits and damping also provided
    - Parallel actuators have 100% control authority
  - Parallel actuator for directional pedals acts as friction brake for trim.
    - Pedal travel limits and damping also provided
    - Parallel actuators have 100% control authority
  - Series actuators provide limited authority Stability Augmentation System (SAS).

# *CSC Overview*

- Control Loading CSC provides the real time interface between the Manned Module CSCs and the Vendor supplied ECL system
  - Includes mode control, TRIM/AFCS interactions (parameters necessary to affect Control Force Feel), Inputs to Aero & Engines CSC
  - Includes Input/Output (I/O) for control grip switches and variable controls, per Fidelity Analysis for each aircraft.
    - Grip switch I/O is serial data bus within ECL system conforming to Controller Area Network (CAN) Bus specification ISO 11898 (1994)
    - CAN Bus data is appended to Ethernet packets from ECL computer to Manned Module
    - I/O card in each stick/grip assembly reads 16 switches and two analog signals
- ECL system generates the representative control feel characteristics for each specific aircraft type, based on information passed to it by the Control Loading CSC.

# CSC Overview (Cont)

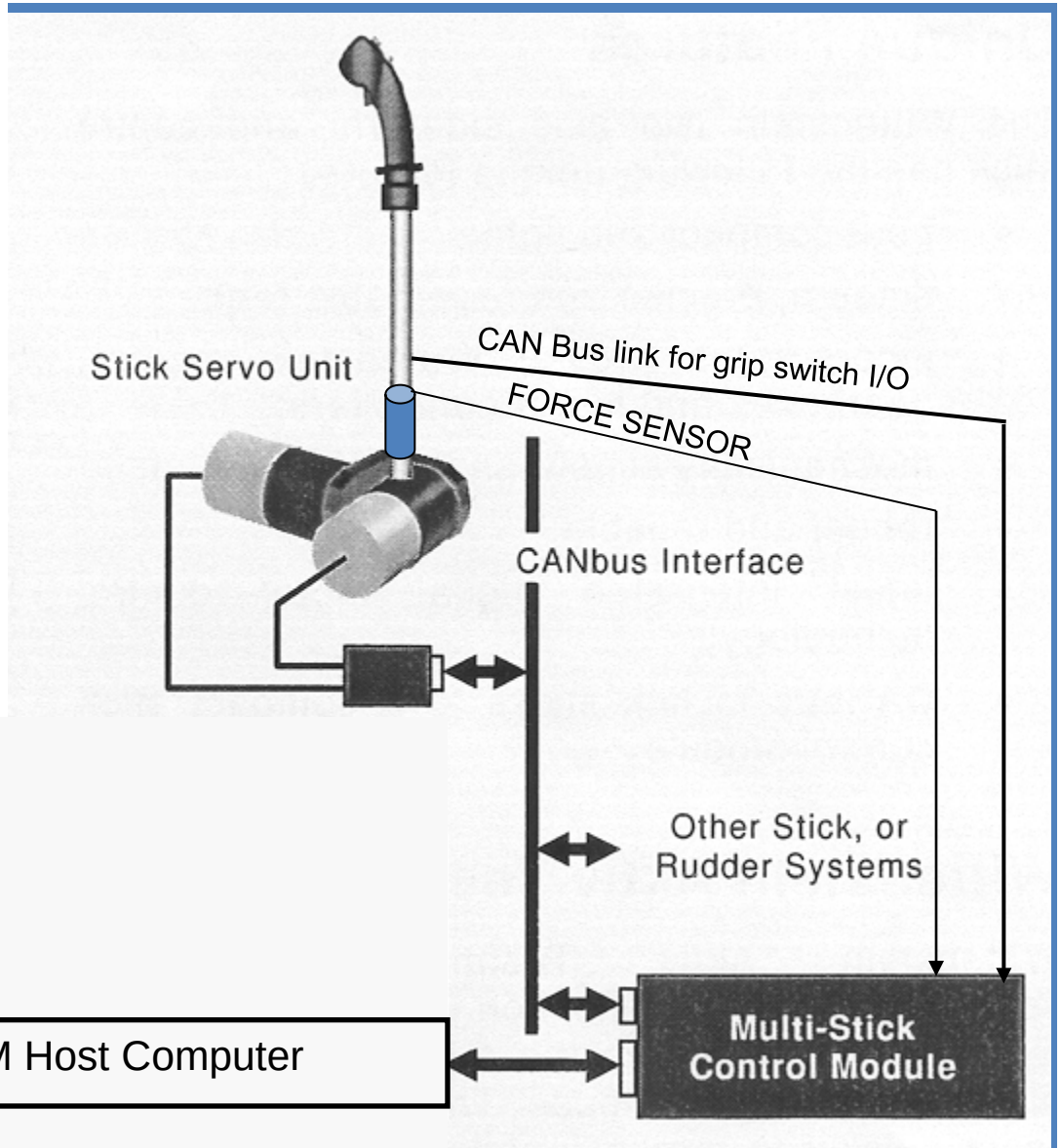


MM Host Computer

# *Design Approach*

- The UH-60M ECL CSC will be re-used as the baseline for the UH-72A ECL CSC

- UH-72A specific modifications will be made to the ECL CSC and ECL Computer software
  - Force curve data received from Thales
  - Travel limit data received from Thales
  - UH-72A specific cyclic and collective grip switches

# Context/Interface Diagram

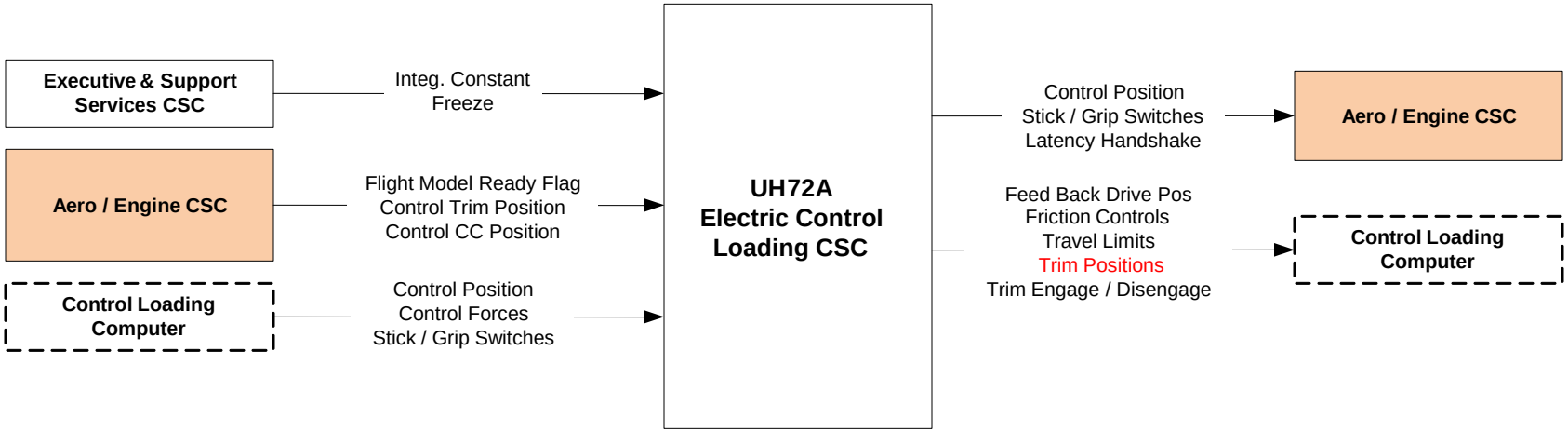

# *Concept of Operation*

- Called from Executive at 60 Hz rate
  - Read Incoming Ethernet packet data from ECL
  - Decode, and send control position data from ECL to *Aero & Engines CSC*
  - Decode ECL system status, advise Maintenance and Diagnostics
  - Decode CAN Bus grip switch data and distribute via local CSC symbol base memory interfaces. Send trim *switch* status to *Aero & Engines CSC*
  - Write mode control commands and aircraft type to the ECL via Ethernet
  - Write Data Query Messages to ECL for next cycle Read
  - Write Trim Actuator Positions *(zero control force point)* and Trim Release *& HOLD mode* switch status to ECL *(to make correct force feel),* and to *Aero & Engines CSC*
  - Import and Export data to global shared memory symbols
  - Execute near start of 60 Hz frame to reduce latency

# Concept of Operation

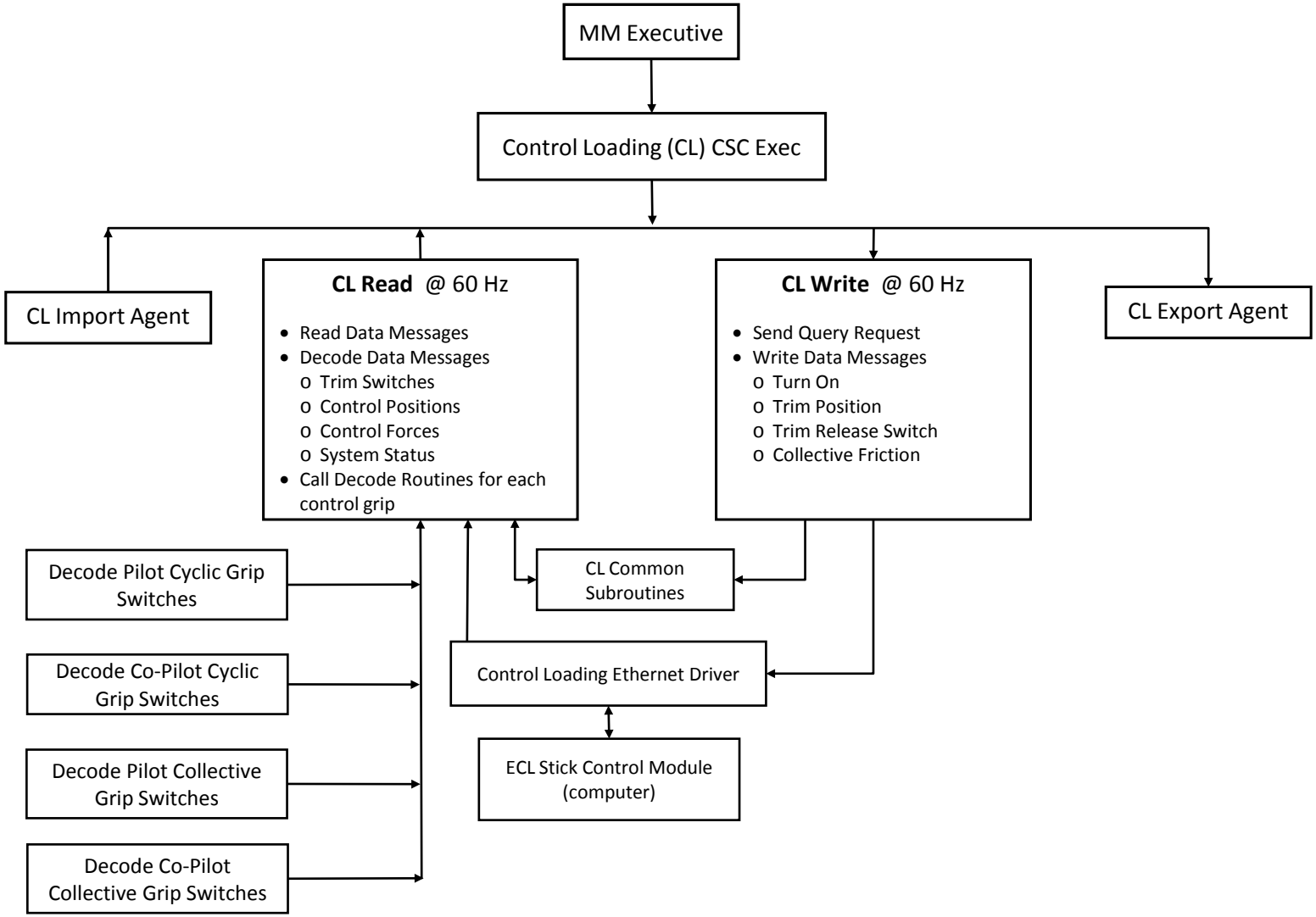

# *Aircraft Operational Overview*

- The UH-72A is a dual engine aircraft has the following components or capabilities
  - Search Light
  - Sling Load
  - Rescue Hoist
  - Water Bucket

# UH-72A Aircraft System Diagram

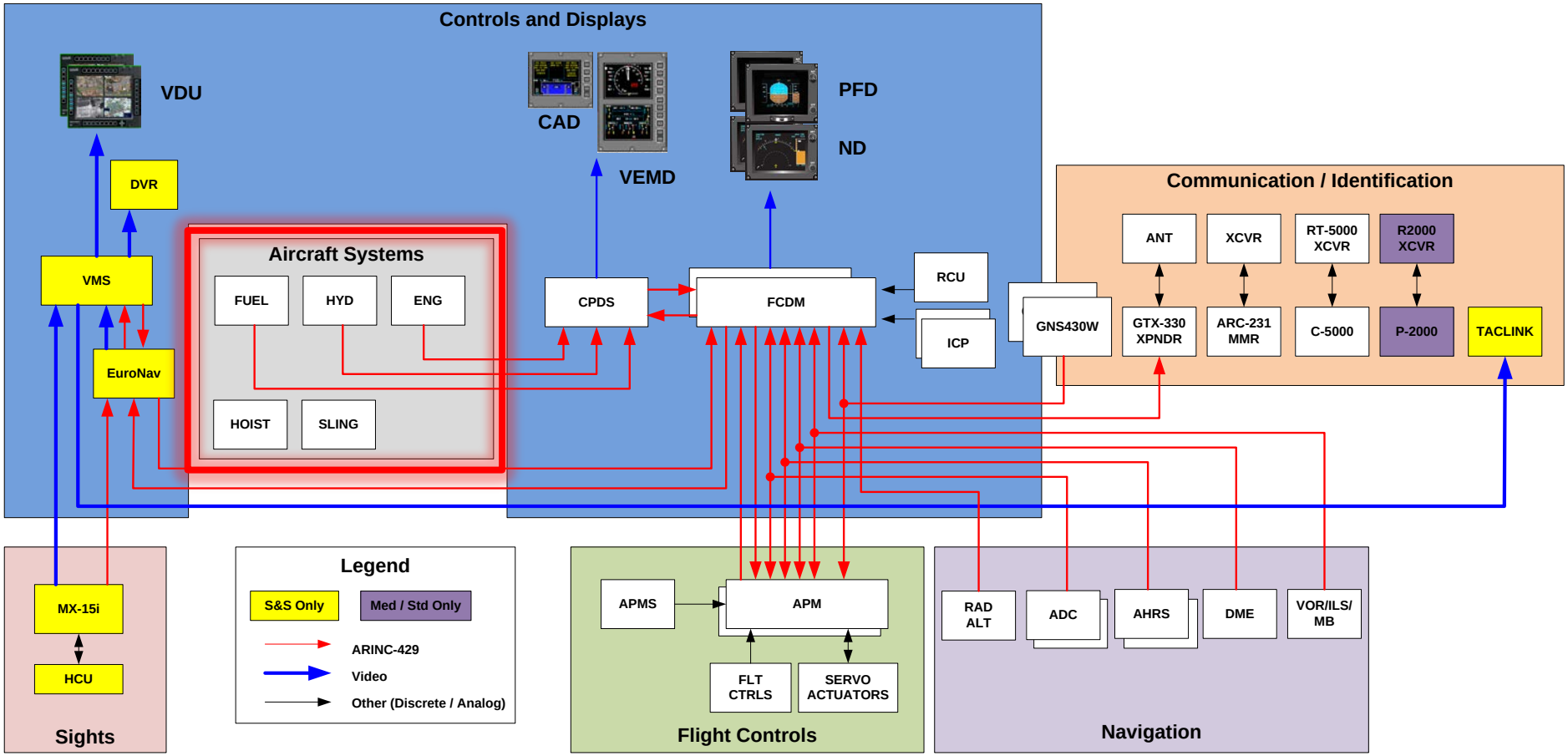


| | |
|---|---|
| ADC | Air Data Computer |
| AHRS | Attitude Heading Reference Set |
| ANT | Antenna |
| APM | Autopilot Module |
| APMS | Autopilot Mode Select Panel |
| CAD | Caution Advisory Display |
| CPDS | Central Panel Display System |
| DME | Distance Measuring Equipment |
| DVR | Digital Video Recorder |
| ENG | Engine Instrumentation |
| FCDM | Flight Control Display Module |
| GNS430W | Garmin GNS430W |
| HYD | Hydraulic System |
| ICP | Instrument Control Panel |
| ILS | Instrument Landing System |
| MB | Marker Beacon |
| MMR | Multimode Radio |
| ND | Navigation Display |
| PFD | Primary Flight Display |
| RADALT | Radar Altimeter |
| RCU | Reconfiguration Control Unit |
| S&S | Security & Support |
| VEMD | Vehicle Engine Management Display |
| VHF | Very High Frequency |
| VMS | Video Management System |
| VOR | VHF Omnidirectional Range |
| XCVR | Transceiver |
| XPNDR | Transponder |

# *CSC Overview*

- The UH-72A Aircraft Systems CSC will simulate
  - Searchlight
  - Fuel System (IC / Current Conditions)
  - Cargo Hook
  - Rescue Hoist
  - Battle Damage
  - Clock
  - Aural Cue

# *Design Approach*

- The UH-72A AC Systems CSC will be based on the UH-60M software baseline
  - Sling load capabilities will be modeled based on the UH-72A capacity
  - Add Rescue Hoist
    - Rescue Hoist NCM3 baseline will be reused
      - Host software will be modified to allow operations to be performed by the AVCATT MM Host software in addition to the NCM3 software
      - Extensibility to NCM3 for a UH-72A variant will be preserved
      - No modification to the OneSAF Hoist behavior required
    - For Rescue Hoist, the following operation will be implemented
      - The existing OneSAF NCM3 hoist behavior will be used to tell the AVCATT Manned Module to perform a hoist operation.
      - The AVCATT Manned Module will automatically lower the hoist, attach the entity, and raise the hoist, and complete the hoist without operator I or pilot ntervention.

# *Design Approach (Cont)*

- The UH-72A AC Systems CSC will be based on the UH-60M software baseline (Cont)
  - Add Water Bucket
    - Water Bucket NCM3 baseline will be reused
      - Water Bucket software will be modified to allow operations to be performed by the AVCATT MM Host software in addition to the NCM3 software
      - Extensibility to NCM3 for a UH-72A variant will be preserved
    - The water bucket will be attached as a sling load
    - The bucket will be filled using existing AVCATT NCM3 code
    - Add the water release and create the appropriate detonation to the AVCATT MM Host
  - AC Systems will be responsible for performing Fuel System quantity initial conditions and in flight refueling
    - Fuel System fuel flow and fuel tank quantity computations will be performed with the Aero / Engine CSC (Thales)

# UH-72A Context / Interface Diagram

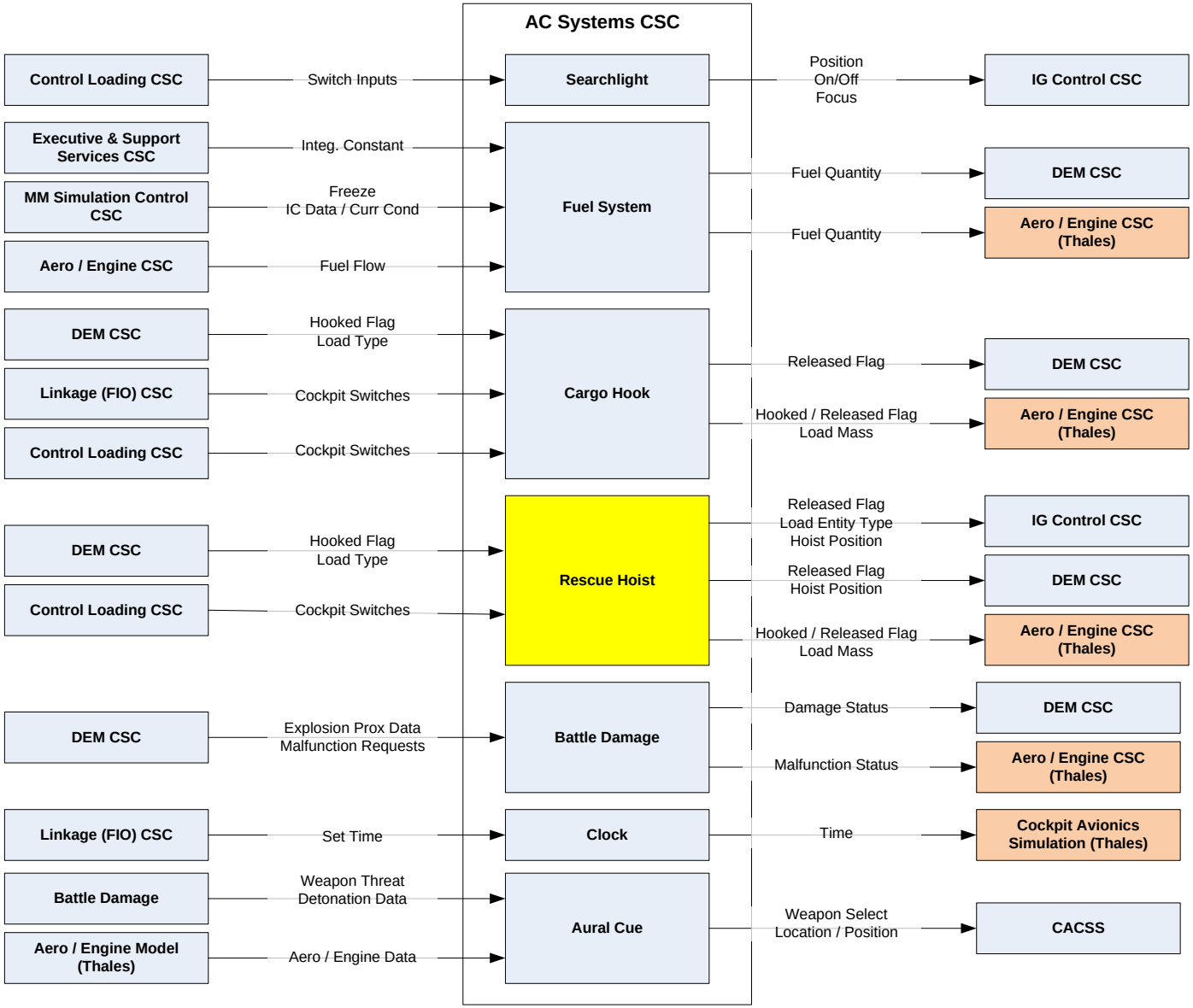

# UH-72A Concept of Operation

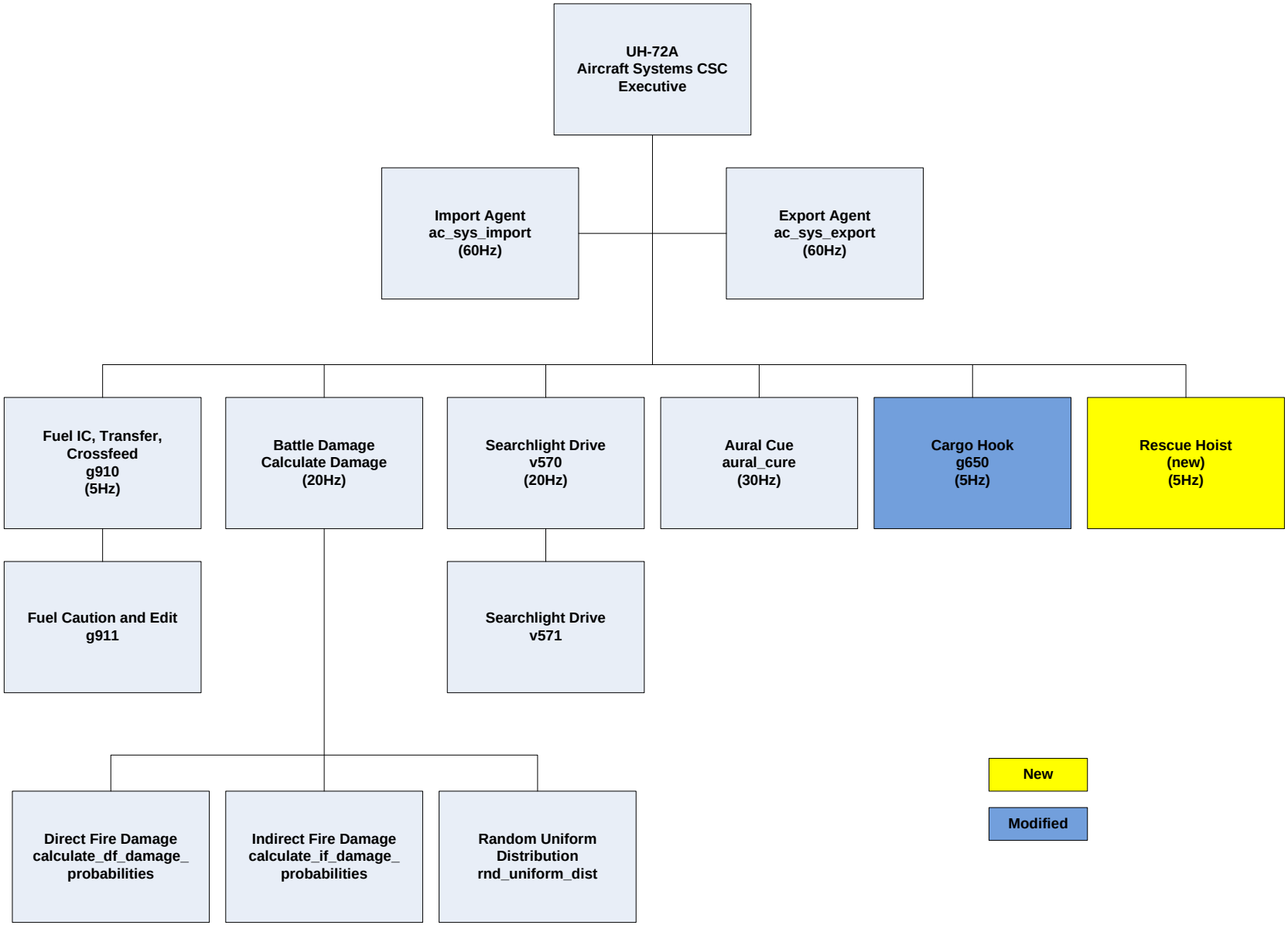

# CSC Overview

- CSC Overview
  - IG Control is responsible for formatting host data for sending to the IG computational system

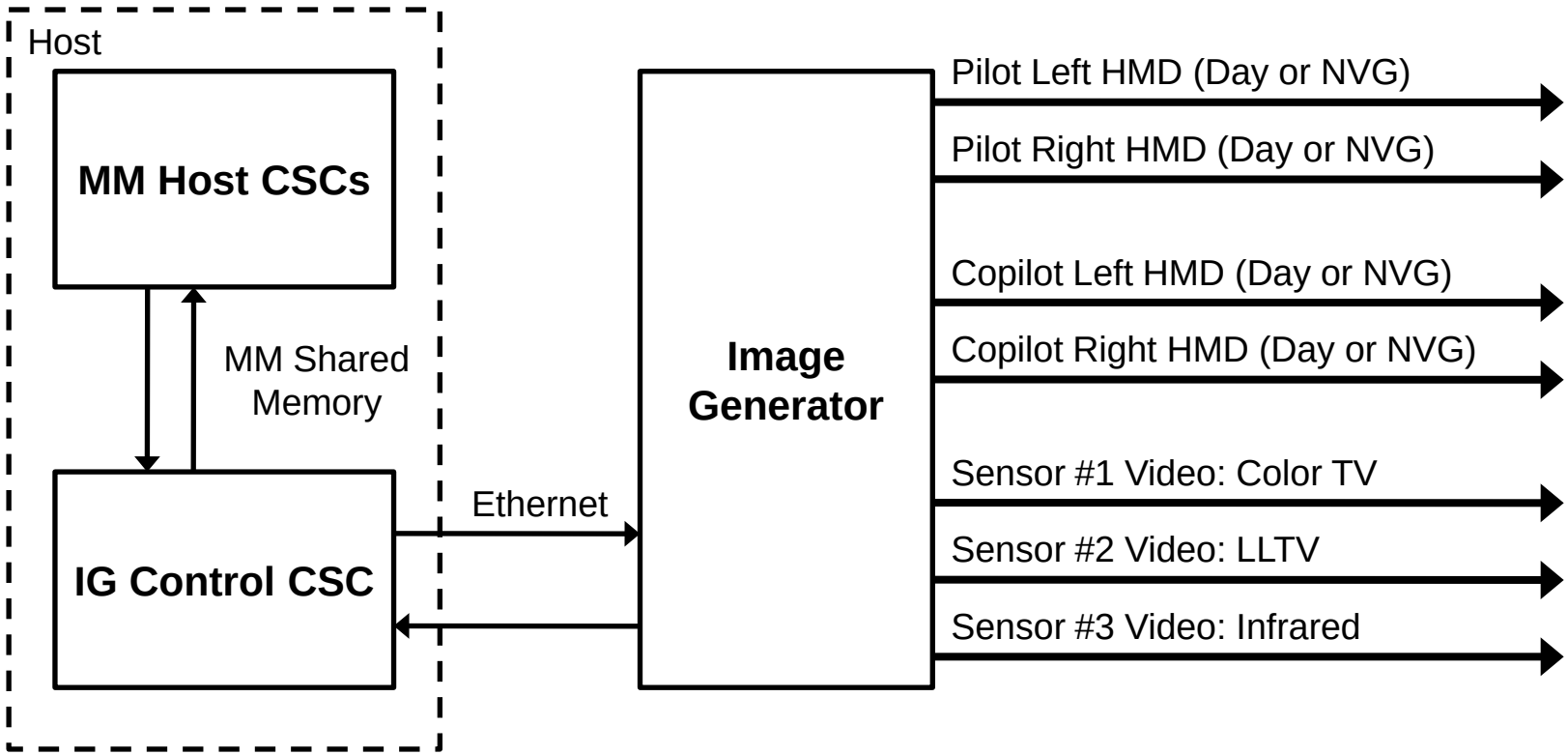

# *Design Approach*

- Reuse architecture from the UH-60M
- New / Modified Functionality
  - UH-72A visual entity type control
    - Standard (no sensor ball)
    - Medevac (no sensor ball)
    - Security and Support (with sensor ball)
      - Stowed / deployed downlink antenna
  - Hoist visual model control with jungle penetrator or sked
  - Switchable UH-72A cockpit mask
    - With / without VDU installed / unstowed
    - Individual control for pilot and copilot stations
    - Doors closed
  - Aircraft-specific aircraft lighting
  - MX-15i sensor control
    - Additional (Sensor #3) channel control (Color TV)
  - Updated collision vectors for UH-72A specific dimensions / skids
  - Searchlight control (azimuth, elevation, and field of view)

# *Concept of Operation*

- Host data includes
  - Ownship position and orientation
  - Sensor position, orientation, FOV, model control
  - Environmental settings
    - Time of Day
    - Visibility
    - Weather (clouds, fog, etc.)
  - Networked entities
    - Vehicles, explosions, animations
  - Special Effects
    - Blowing sand/dust
    - External lighting controls for entities

# Context/Interface Diagram – IG Control

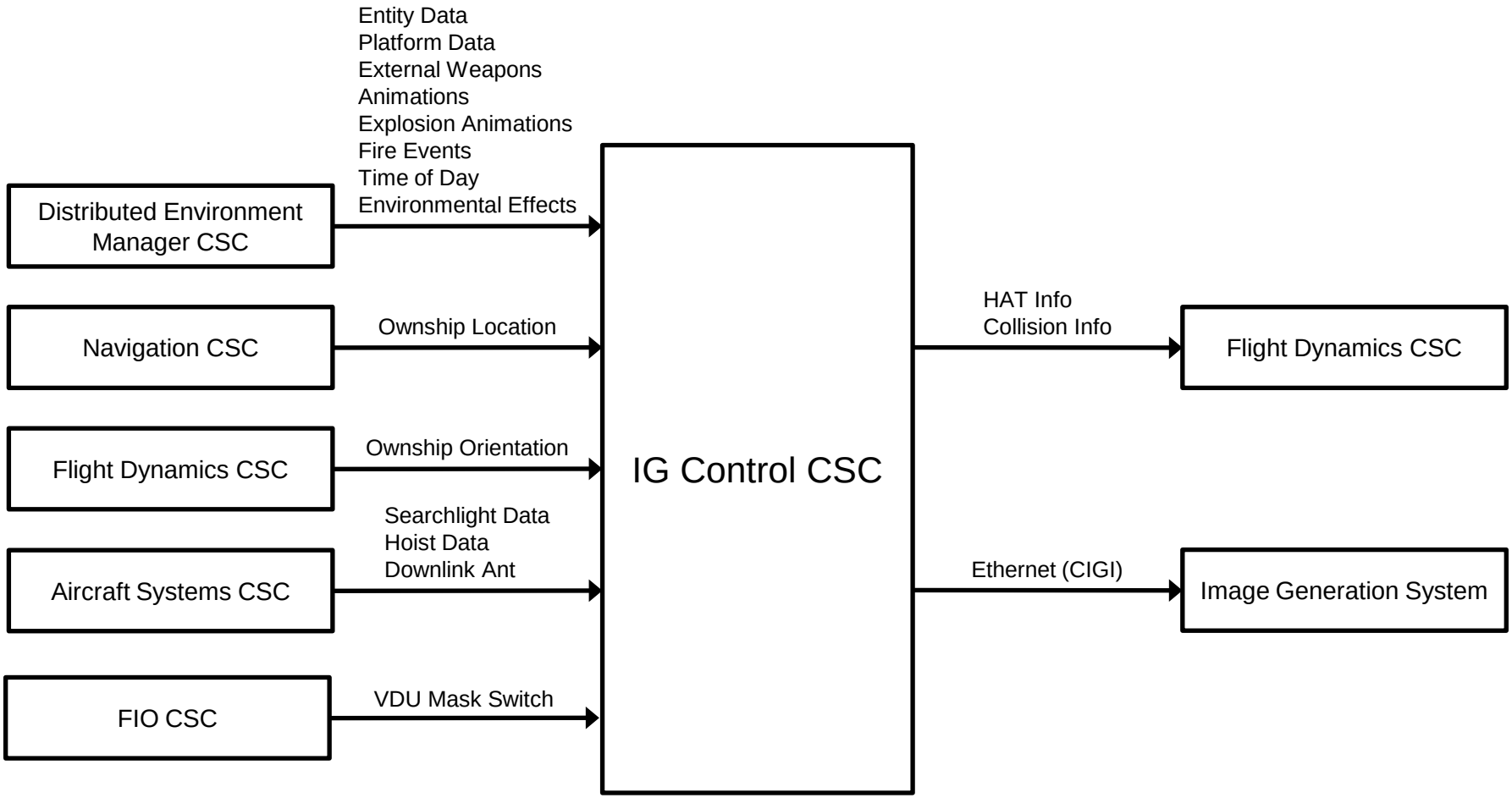

# *IG Design Approach*

- The existing AVCATT Rockwell Collins IG and IPDG software will be modified or utilized to provide the following UH-72A functionality
  - UH-72A Eyepoint / Channel Configurations
    - Provide updates to the necessary IG configuration file(s) to define the UH-72A aircraft channel configuration and aircraft-specific fields of view, eyepoints, and attach points (spotlight)
  - Spotlight
    - Utilize the existing AVCATT spotlight capability for the UH-72A (define correct attach point)
  - Laser Illuminator
    - Utilize existing AVCATT IR spotlight capability with IPDG focus mask to simulate laser illuminator with tight focus
  - MX-15i Sensor
    - Utilize the existing AVCATT EO / IR sensor capabilities for the UH-72A MX-15i sensor
    - Add Ethernet LEVI connection from existing IG IAT Render node for 3rd sensor channel
    - Fixed fields of view with IPDG interpolation for continuous zoom
  - Cockpit masks with real time switching
    - Up to 4 GFE masks with switched polygons for in-flight reconfiguration of the pilot or copilot Sensor Video Displays
    - Masks / polygons switched based on host command

# *AVCATT IG Modification*

- AVCATT IG is configured with
  - Two (2) sensor nodes
    - Sensor nodes output video to the IPDGs via Ethernet (LEVI)
  - One (1) dedicated IAT node
    - IAT node outputs video to the OCTEC card in the IPDG #5 node via DVI (used for Longbow IAT)
    - IAT node performs internal IAT function for the OH-58D configuration
  - Past / current AVCATT aircraft configurations (AH-64A, AH-64D, OH-58D) required only two sensor video channels (FLIR, TV [switchable between DTV and CTV])
- UH-72A Required Capability
  - UH-72A MX-15i Sensor has three (3) independent sensor cameras vs. the two found in current AVCATT military aircraft types
    - FLIR
    - TV/LLTV
    - Color TV
  - UH-72A IAT can operate on any of the three sensor channels
- Design approach is to add a single Ethernet cable between the IG IAT node and IPDG

# UH-72A IG / IPDG Configuration

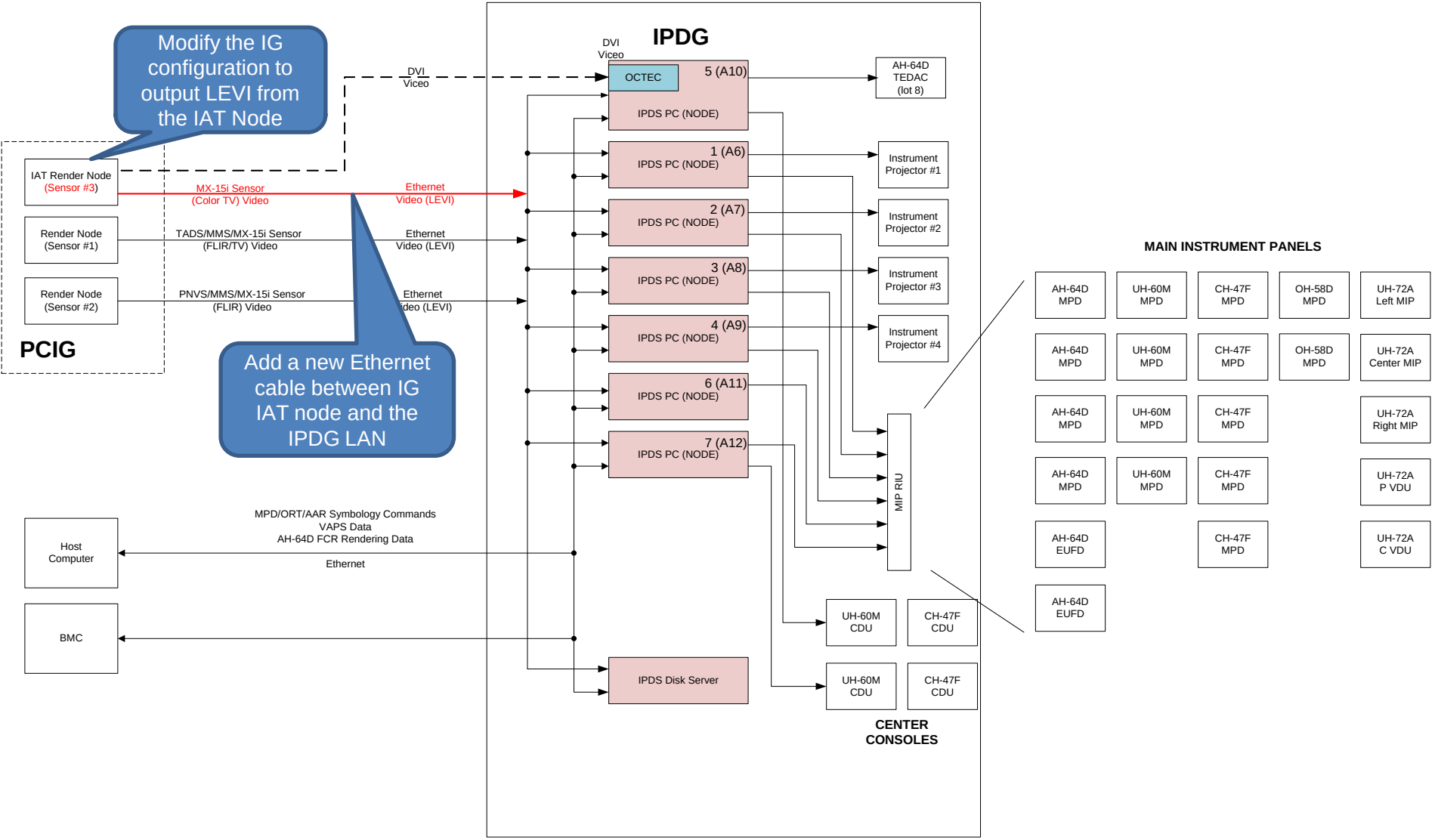

# *CSC Overview*

- The Distributed Environment Manager (DEM) serves as an interface between V-DIS compliant simulations running on the real time network and the manned module
  - DEM transmits / receives V-DIS PDU packages on the AVCATT Real Time Network
    - DEM imports data from the network so that the AVCATT MMs can see other simulated entities and respond to network events
    - DEM exports state data from the manned module to the network so that other simulations can see the manned module entity in the exercise
  - DEM provides an interface for the Battle Master Controller (BMC) to communicate with the Manned Module and other systems
  - DEM maintains a Ground Truth Database (GTDB) containing data for active entities
  - DEM filtering agents filter imported data from the GTDB and pass pertinent data to the simulated systems and sensors onboard the manned module

# System Diagram

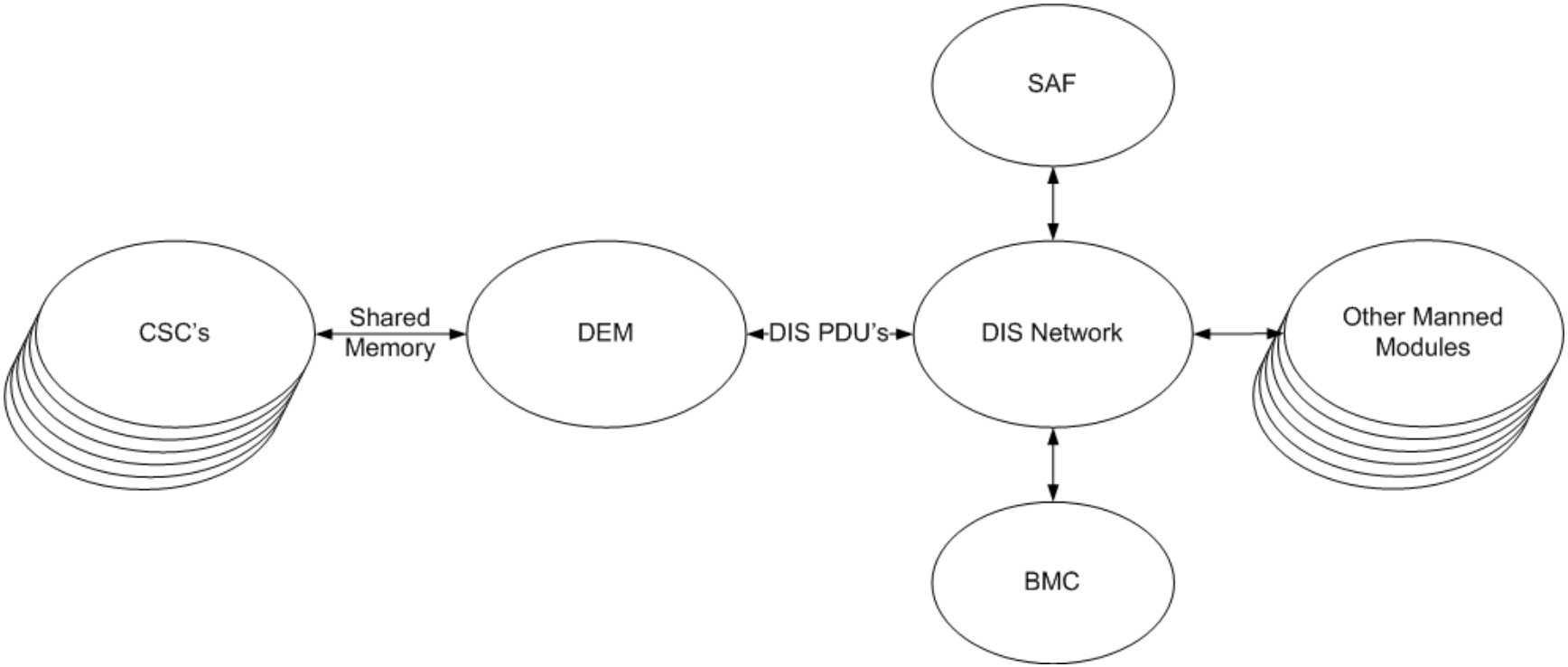

# *Design Approach*

- UH-72A will reuse the architecture from the AVCATT UH-60M
- Add UH-72A Entity ID and State PDUs
  - Specific field for aircraft type
    - Standard
    - Security and Support
    - Medevac
  - Appearance field for external lighting and search light
  - Add articulated part field for Downlink Antenna
  - Add processing Hoist Load
    - OneSAF initiates hoist
    - Manned module Aircraft Systems performs the hoist automatically and handles cable cut
    - DEM provides interface between OneSAF and Aircraft Systems
  - Add processing Water Bucket dump

# Concept of Operation

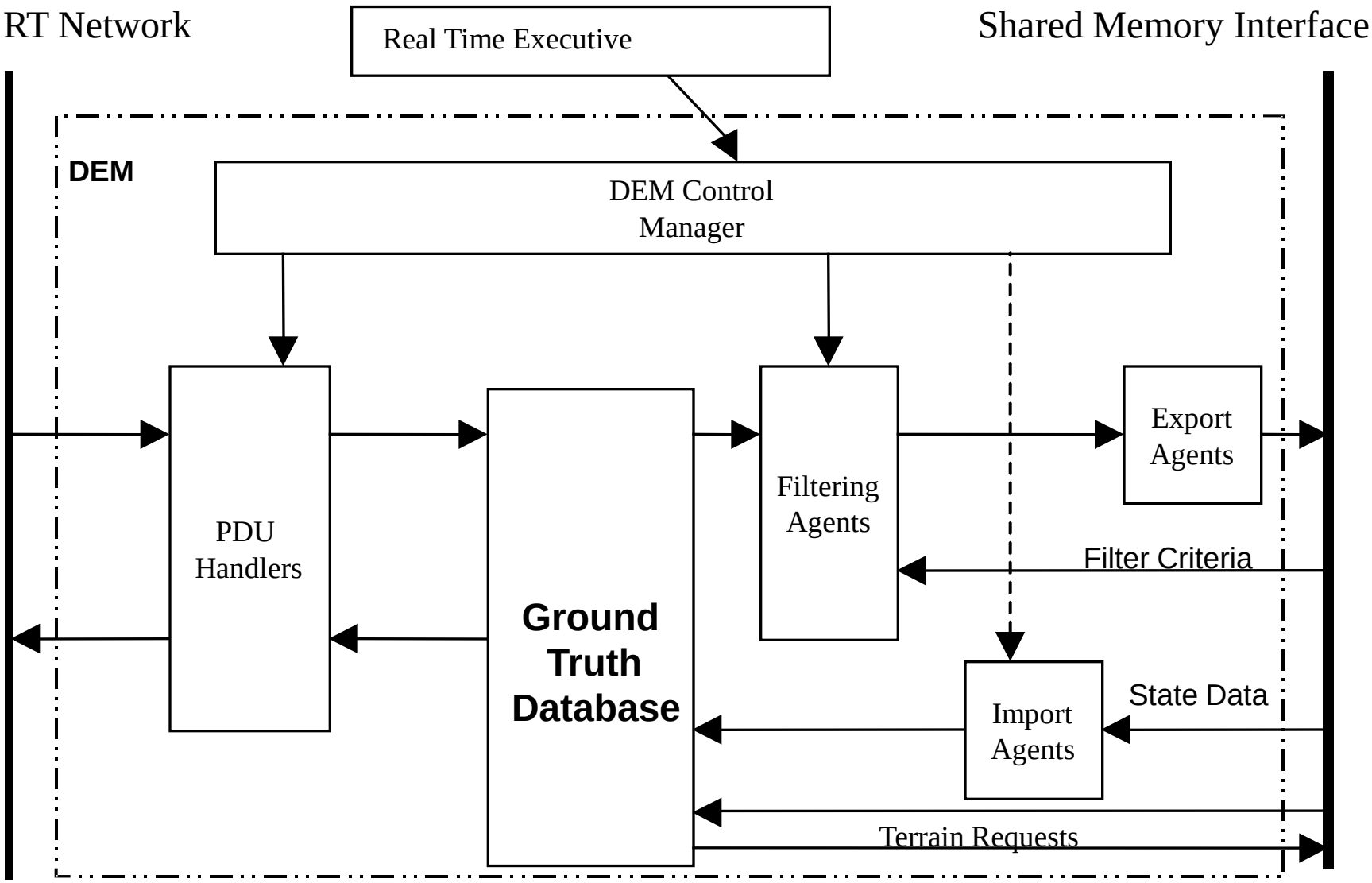

# Incoming PDU Concept of Execution

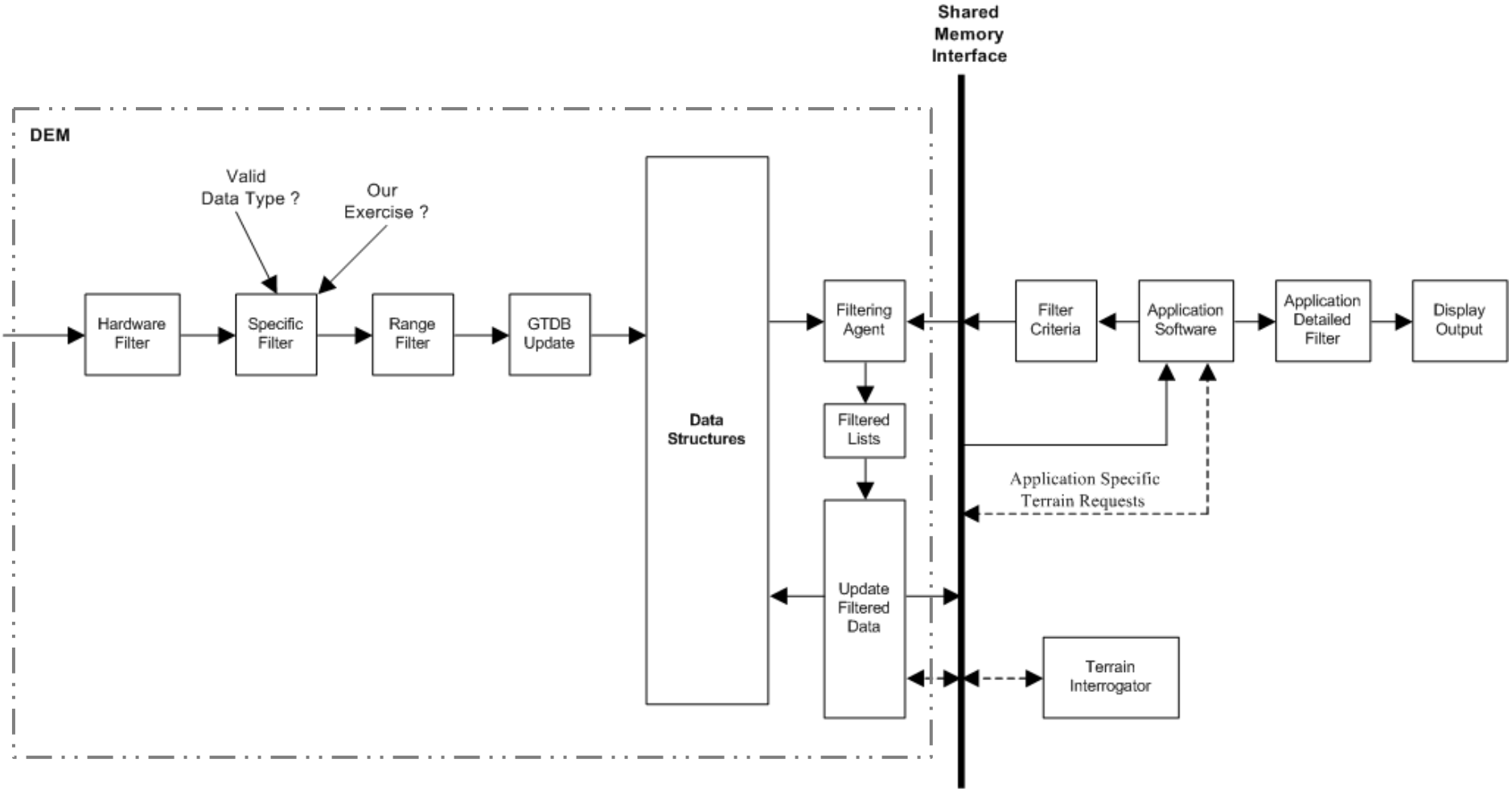

# Outgoing PDU Concept of Execution

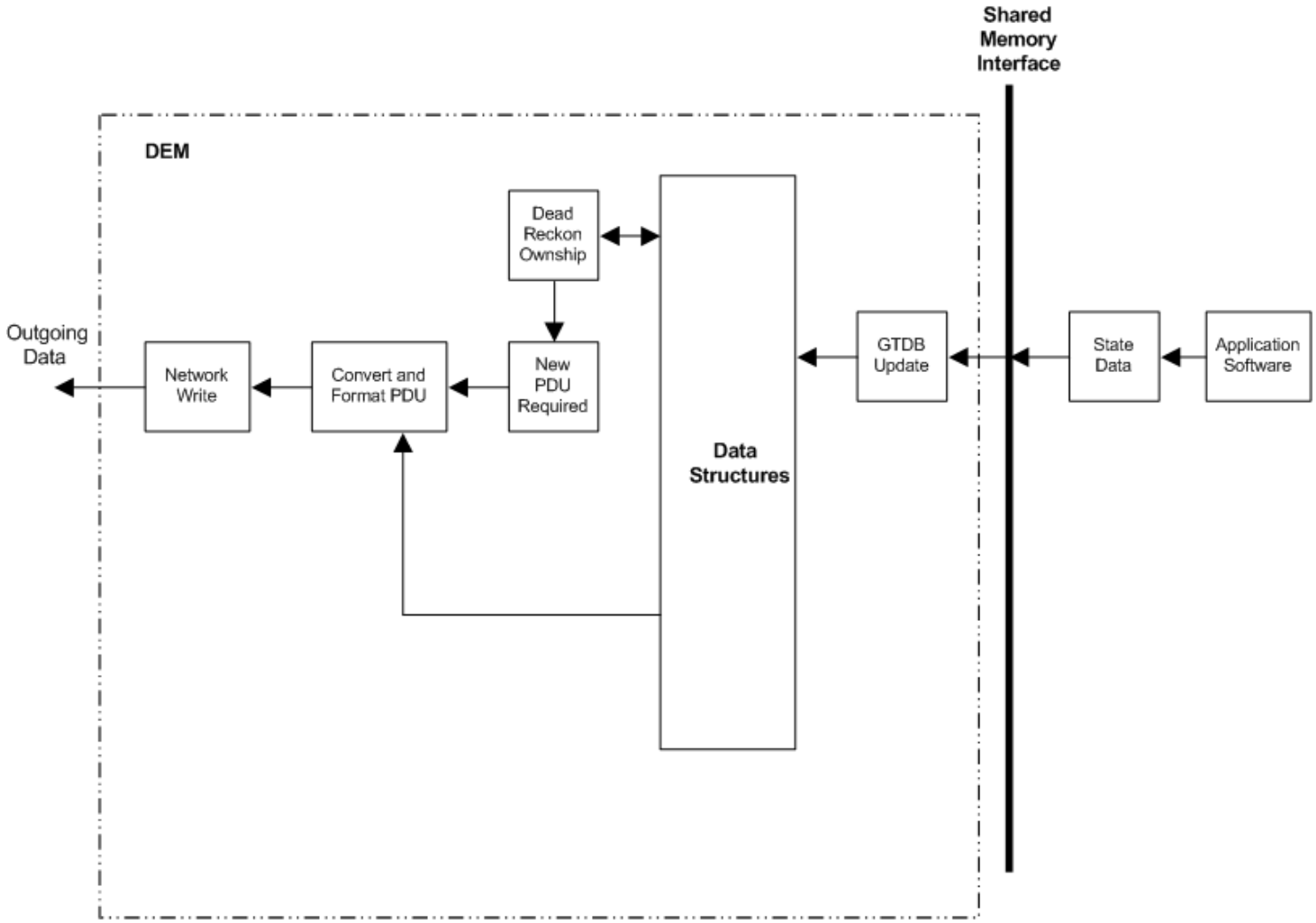

# Real-Time Concept of Execution

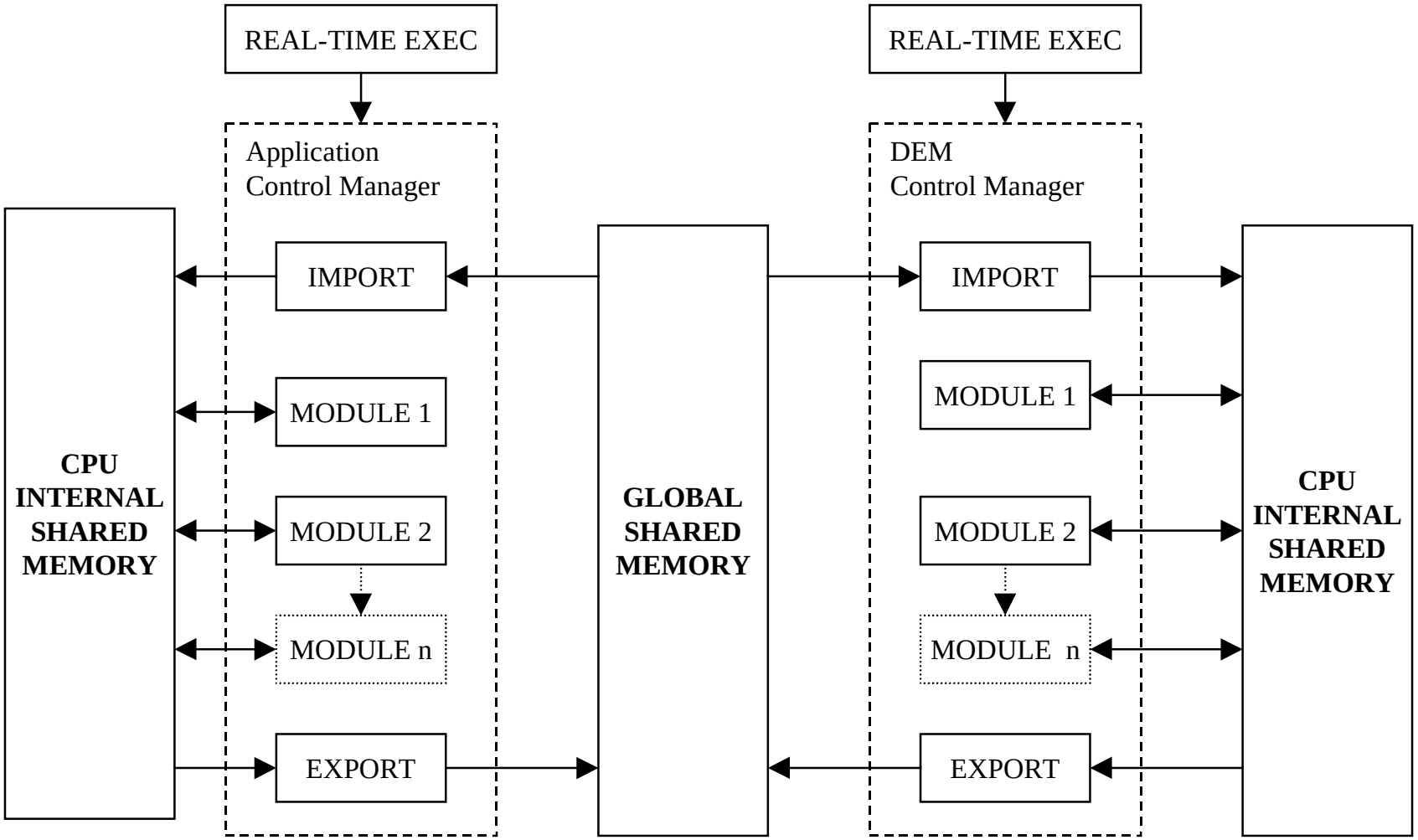

# Context / Interface Diagram

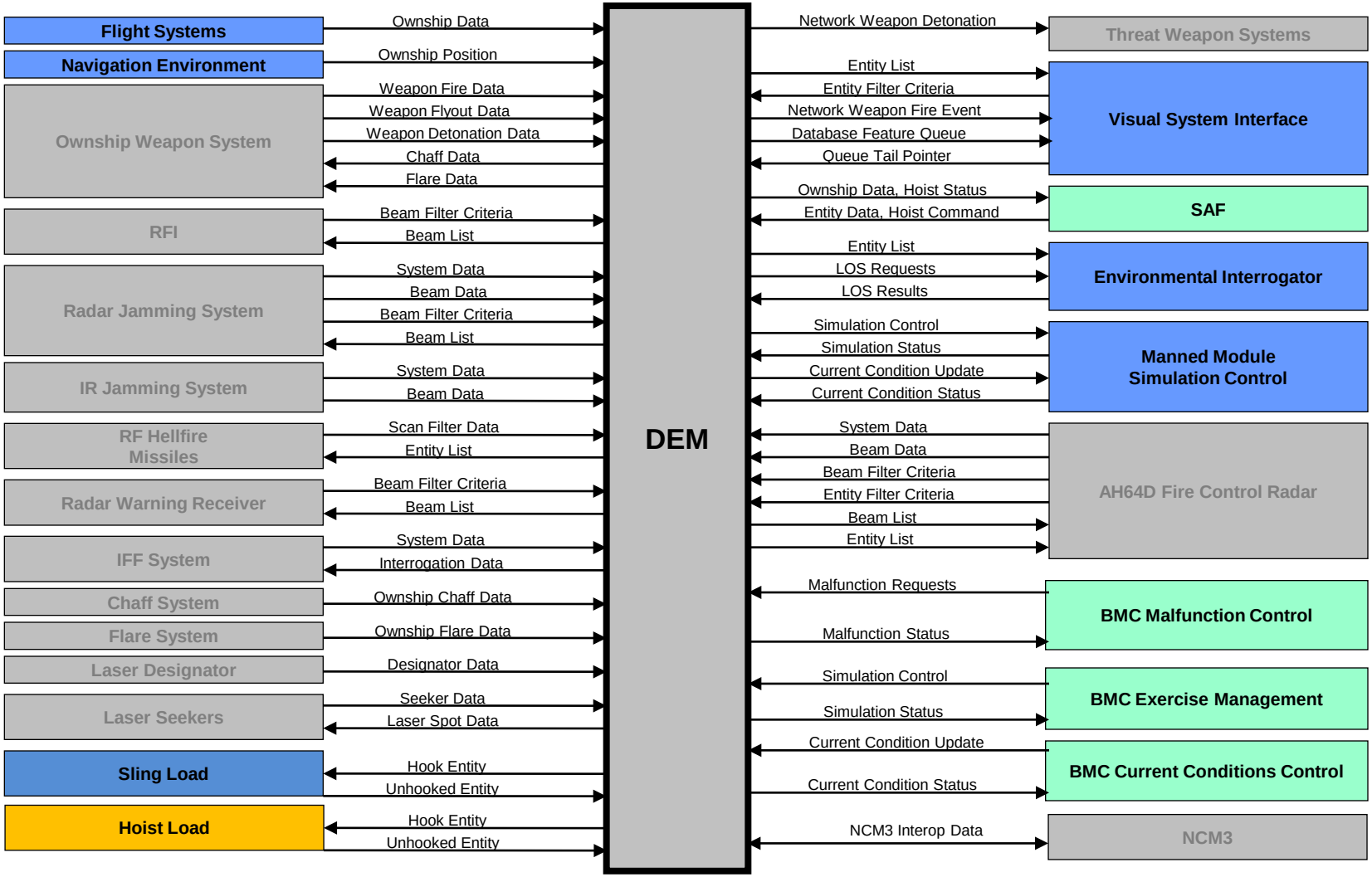

# *Overview*

- Voice communication is handled by up to 4 types of radios in the UH-72A based on configuration.
- Standard/Medevac
  - 1 RT-5000
    - AM/FM radio
  - 1 P-2000
    - FM radio
  - 1 ARC-231
    - Multiband radio
  - 2 Garmin 430W
    - VHF Radio
- S&S
  - 2 RT-5000s
    - AM/FM radio
  - 1 ARC-231
    - Multiband radio
  - 2 Garmin 430W
    - VHF Radio

# UH-72A Aircraft System Diagram

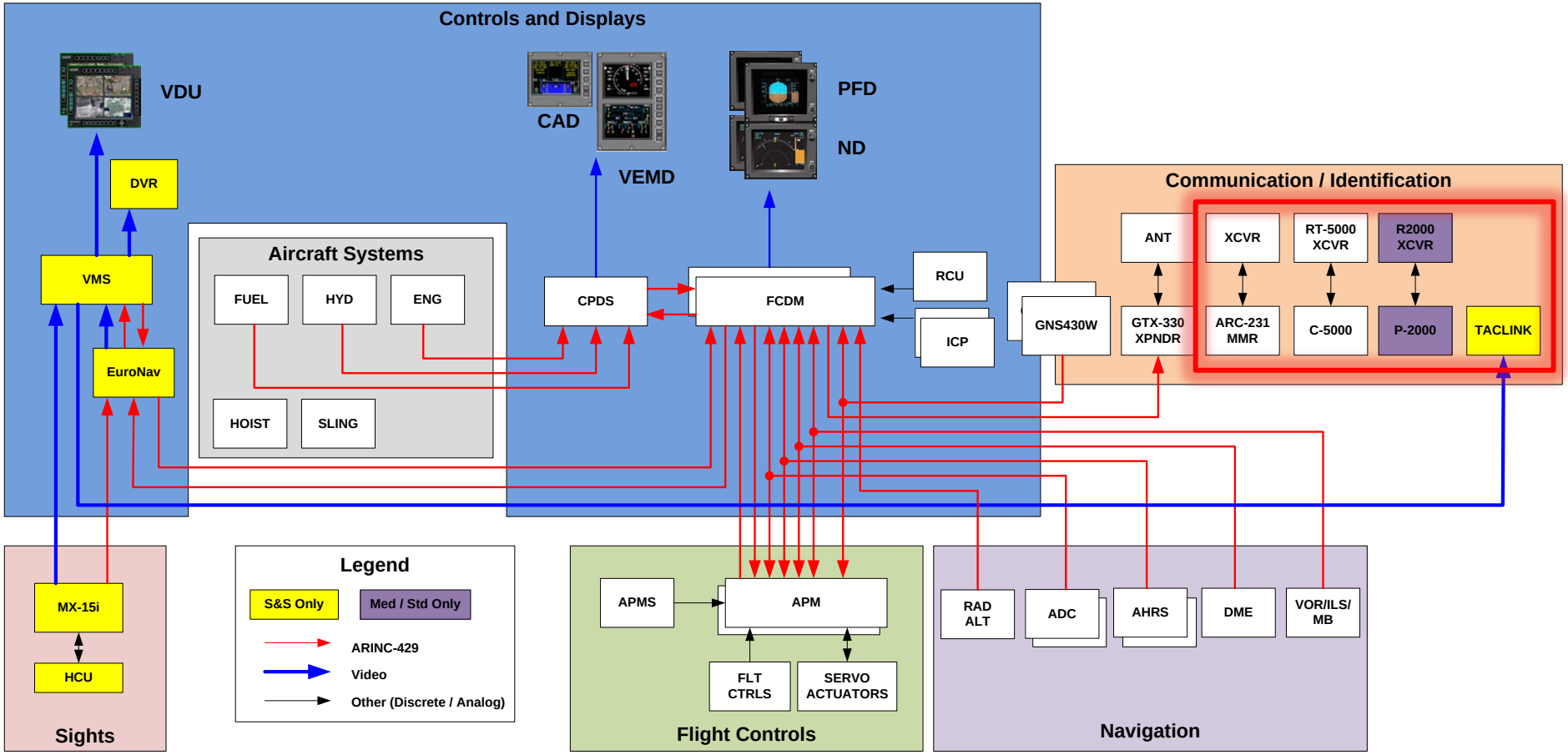


| | |
|---|---|
| ADC | Air Data Computer |
| AHRS | Attitude Heading Reference Set |
| ANT | Antenna |
| APM | Autopilot Module |
| APMS | Autopilot Mode Select Panel |
| CAD | Caution Advisory Display |
| CPDS | Central Panel Display System |
| DME | Distance Measuring Equipment |
| DVR | Digital Video Recorder |
| ENG | Engine Instrumentation |
| FCDM | Flight Control Display Module |
| GNS430W | Garmin GNS430W |
| HYD | Hydraulic System |
| ICP | Instrument Control Panel |
| ILS | Instrument Landing System |
| MB | Marker Beacon |
| MMR | Multimode Radio |
| ND | Navigation Display |
| PFD | Primary Flight Display |
| RADALT | Radar Altimeter |
| RCU | Reconfiguration Control Unit |
| S&S | Security & Support |
| VEMD | Vehicle Engine Management Display |
| VHF | Very High Frequency |
| VMS | Video Management System |
| VOR | VHF Omnidirectional Range |
| XCVR | Transceiver |
| XPNDR | Transponder |

# UH-72A Concept of Operation

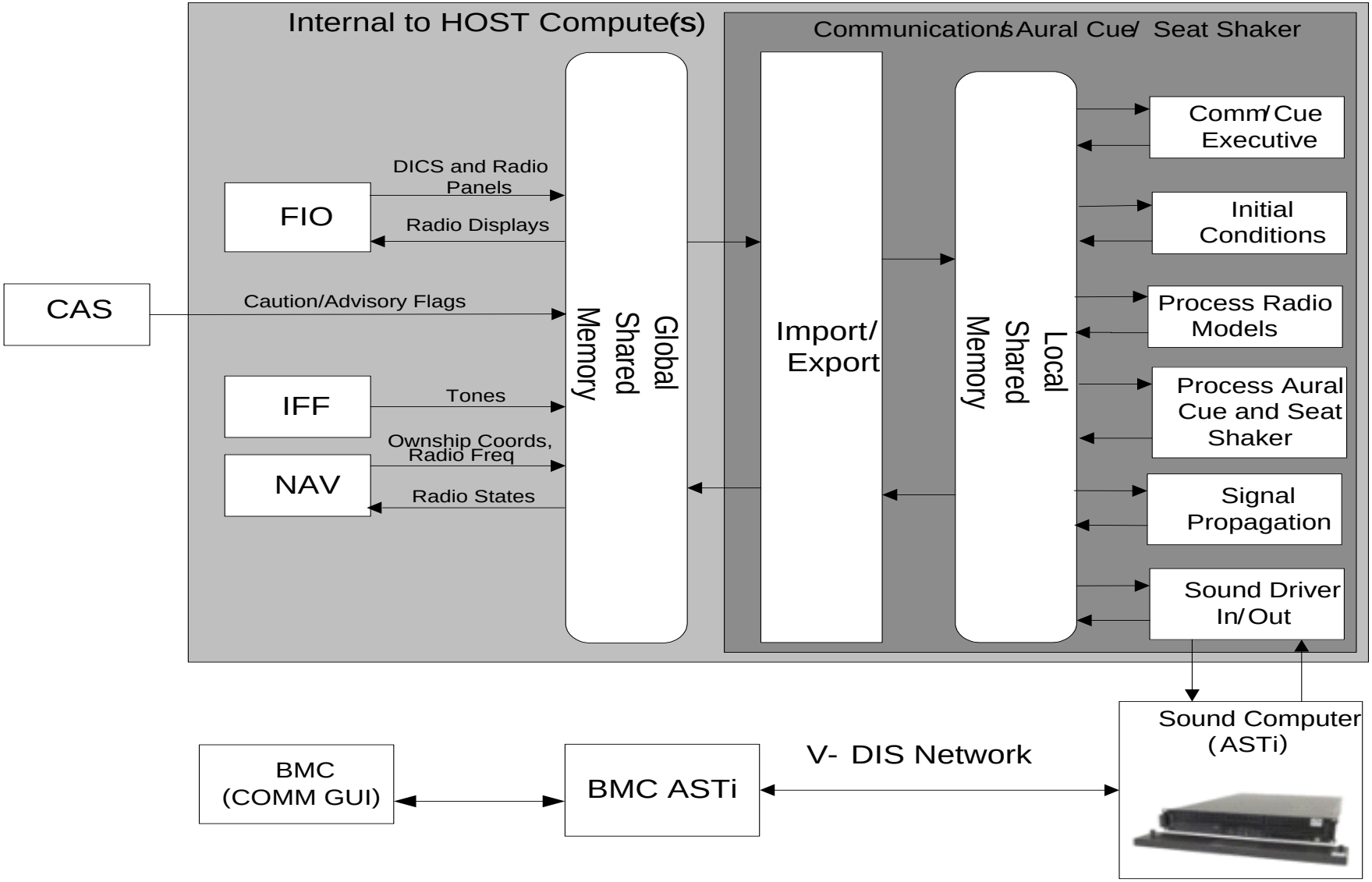

# Context/Interface Diagram

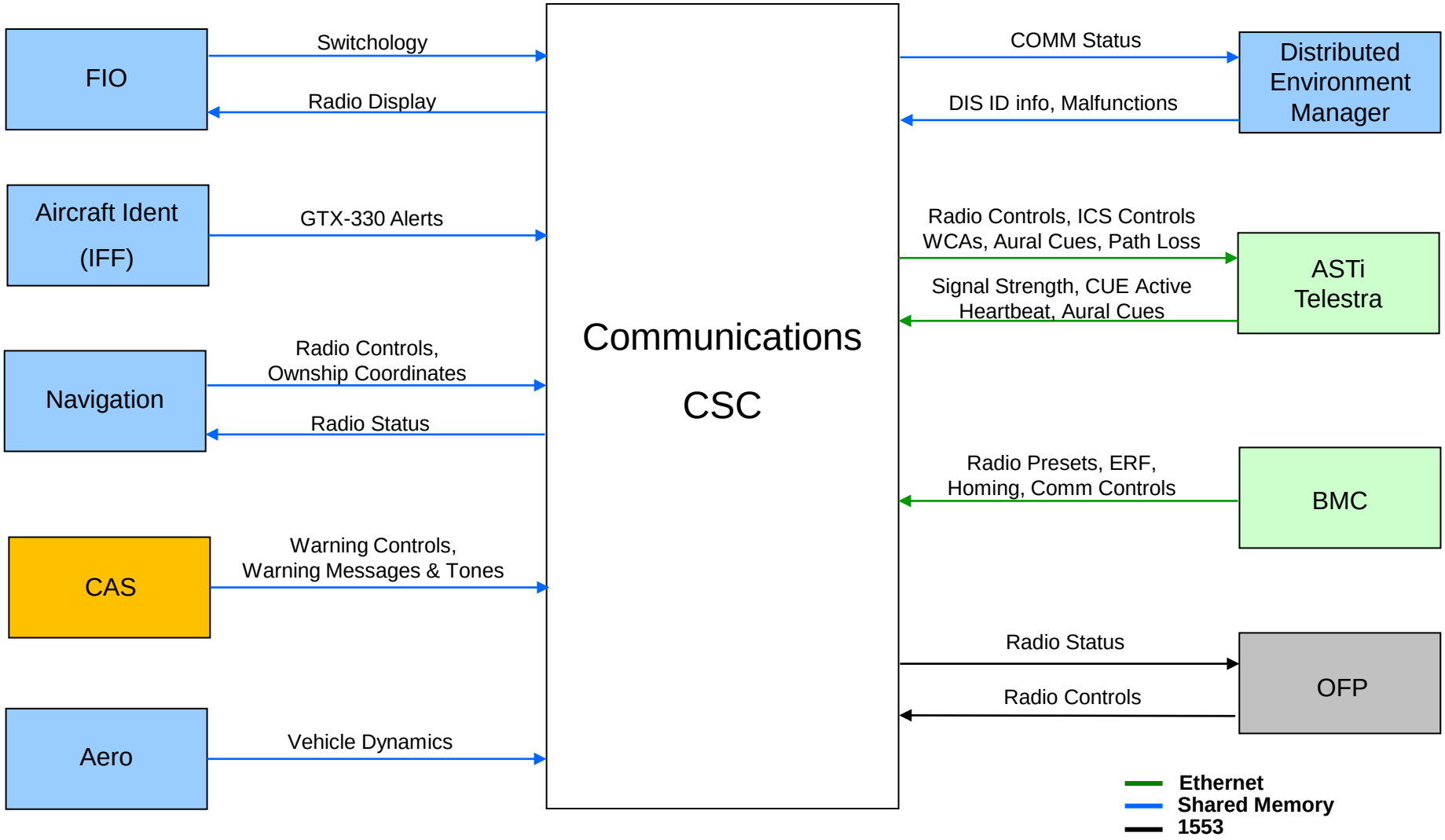

# *Voice Communications Overview*

- Overview - Voice Communications
  - The Voice Communications sub-CSC is comprised of three functional components:
    - Import/Export
    - Model Processing
    - Radio/Digital Interphone Communications System
  - Voice Communication radio models:
    - GARMIN 430
    - RT-5000
    - P-2000
    - ARC-231
    - Digital Interphone Communications System

- The UH-72A TACLINK capability is simulated via the SVRS display of Manned Module MX-15i Sensor and VDU information at the BMC / AAR

# ARC231 Capabilities Supported

ARC-231 – Same as UH-60M AVCATT

| Mode/Capability | ARC-231 |
|---|---|
| VHF AM Single Channel | X |
| VHF FM Single Channel | X |
| UHF-AM Single Channel | X |
| UHF-FM Single Channel | X |
| SINCGARS Frequency Hopping | X |
| Have Quick (HQI and HQII) ECCM | X |
| Havequick FMTs | Display Only |
| Maritime | X |
| Satellite Communication (SATCOM) | X |
| Demand Assigned Multiple Access (DAMA) 5K or 25K | X |
| Quickstart DAMA | |
| DAMA IW | |
| DAMA Orderwires | |
| DAMA Guard List | |
| DAMA I/O Rates | |
| Crypto | X |
| CTCSS Tones | X |
| Squelch | Wallpapered ON |

| Mode/Capability | ARC-231 |
|---|---|
| Active Scan Mode | |
| LOS Scan Mode | X |
| Maritime Scan Mode | X |
| SATCOM Scan Mode | X |
| Guard Receiver | X |
| Modify Presets | |
| Display Brightness | X |
| Volume Level | X |
| Automatic Direction Finder (ADF) | |
| Beacon | |
| Retransmit | |
| OTAR | |
| ADC | |
| Status Messages | |
| Maintenance Pages | |
| ARC231 Fill Panel | |
| BIT | |
| System Test | |
| Zeroize | |
| Digital Messaging | |
| ADM | |
| TI-RE | |
| NCD | |
| Via-Sat Email | |

# P-2000 & RT-5000 Capabilities Supported

| Mode/Capability | P-2000 | RT-5000 |
|---|---|---|
| VHF AM Single Channel | | X |
| VHF FM Single Channel | | X |
| UHF-AM Single Channel | | X |
| UHF-FM Single Channel | X | X |
| Encryption | | X |
| CTCSS Tones | X | X |
| DCS Tones | X | X |
| Burst Tone | | |
| Trunking | X | X |
| Squelch | Wallpapered ON | |
| Scan Mode | | X |
| Guard Receiver | | |
| Modify Presets | | |
| Bandwidth | Always Standard | |

| Mode/Capability | P-2000 | RT-5000 |
|---|---|---|
| TX Power | Always HIGH | |
| Qmem | | |
| Display Brightness | X | X |
| Volume Level | X | X |
| Volume Test | X | X |
| Relay/Retransmit | | |
| Simulcast | | |
| Relay-Simulcast | | |
| Repeater Mode | | |
| Phone Patch | | |
| Audio Playback | | |
| OTAR | | |
| Status Messages | | |
| Maintenance Pages | | |
| Zeroize | | |

# *Design Approach*

- The AVCATT UH-72A MM configuration will have new control & display units for the ARC-231, RT-5000, and P-2000 radios.
- The ARC-231 radio model will reuse the ARC-231 software from UH-60M AVCATT.
- The ARC-231 Control Indicator will be developed for the UH-72A AVCATT.
- The RT-5000 and P-2000 radio models will be developed for the UH-72A AVCATT based on the ARC-231 LOS band.
- The RT-5000 and P-2000 Control Heads will be developed for the UH72A AVCATT.
- There will be a new interface to NAV for the Garmin 430 VHF radio
- Garmin 430 VHF radio will reuse the ARC-231 LOS mode

# *Design Approach*

- New
  - ARC-231 Control Indicator
  - RT-5000 Radio Model
  - RT-5000 Radio Control/Display
  - P-2000 Radio Model
  - P-2000 Radio Control/Display
  - NAV interface for Garmin 430 VHF radio
- Reuse
  - Reuse UH-60M AVCATT ARC-231  radio model
  - Reuse ARC-231 LOS mode for Garmin 430 radio
- Modify
  - Modify LOS to support RT-5000 & P-2000 radio models

# *AURAL CUE*

# *Overview - Aural Cue*

- Aural cue parameters are sent to the ASTi Telestra which will produce and mix the aural cue sounds.
  - WCAs
  - Environmental Aural Cue
    - Gathers aircraft parameters to produce ownship equipment aural cues:
      - Engines
      - Transmission
      - Rotor
      - Aero Noises
    - Generates environmental cues based on current environmental conditions:
      - Explosions

# UH-72A Aircraft System Diagram

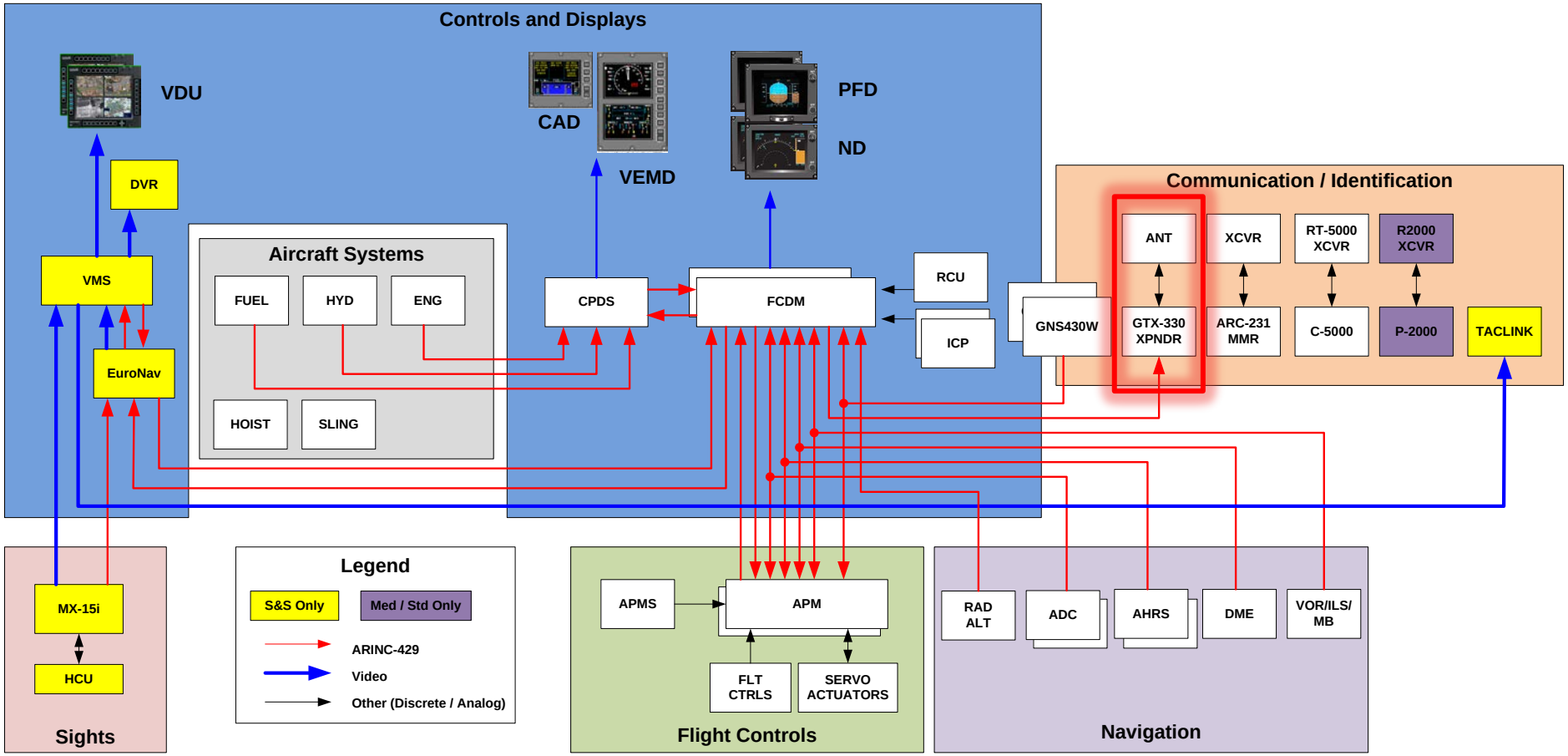


| | |
|---|---|
| ADC | Air Data Computer |
| AHRS | Attitude Heading Reference Set |
| ANT | Antenna |
| APM | Autopilot Module |
| APMS | Autopilot Mode Select Panel |
| CAD | Caution Advisory Display |
| CPDS | Central Panel Display System |
| DME | Distance Measuring Equipment |
| DVR | Digital Video Recorder |
| ENG | Engine Instrumentation |
| FCDM | Flight Control Display Module |
| GNS430W | Garmin GNS430W |
| HYD | Hydraulic System |
| ICP | Instrument Control Panel |
| ILS | Instrument Landing System |
| MB | Marker Beacon |
| MMR | Multimode Radio |
| ND | Navigation Display |
| PFD | Primary Flight Display |
| RADALT | Radar Altimeter |
| RCU | Reconfiguration Control Unit |
| S&S | Security & Support |
| VEMD | Vehicle Engine Management Display |
| VHF | Very High Frequency |
| VMS | Video Management System |
| VOR | VHF Omnidirectional Range |
| XCVR | Transceiver |
| XPNDR | Transponder |

# *Aircraft Capability Summary*

- The Aircraft Survivability Equipment (ASE) CSC encompasses UH-72A Garmin GTX-330 Transponder (XPNDR)
  - The GTX-330 is a civil aviation equivalent of the military Identify Friend or Foe (IFF) systems previously simulated on AVCATT
    - No Mode 1, 2, 4 capability
  - The GTX-330 transmits Mode 3/A, Mode C and Mode S signals to assist Air Traffic Control in identifying the aircraft on air traffic control radar as well as provide enhanced collision avoidance system operations
  - The GTX-330 also provide non-XPNDR functionality
    - Count Up / Count Down Timer
    - Altitude Monitor (Alerts on departure from the current altitude)
    - Flight Time Counter
    - Display of Outside Air Temperature, Pressure Altitude, and Density Altitude

# *Concept of Operation (Aircraft)*

- GTX-330 Transponder
  - Continuously transmits Mode S information
  - Automatically sends out reply signals when Mode A interrogation is received
  - Operates in three distinct modes
    - A, C, and S.
  - Control over the transponder is via the front panel controls

# *Design Approach*

- The ECP-078 UH-60M APX-118 IFF baseline will be used as the UH-72A baseline
- IFF baseline will be modified to
  - Disable the Mode 4 response
  - Implement front panel controls
    - 0 – 7 Numeric Entry
    - 8/9 – Timer Numeric Entry
    - IDENT – Simulate 18 second squawk of the Special Position Identification pulse [no observable AVCATT effect other than display of “IDENT”]
    - VFR – Sets the XPNDR back to the pre-programmed VFR code (1200)
    - ALT – Power Up / Selects Mode A and Mode C. Transponder responds to interrogations and includes altitude information [no observable AVCATT effect]
    - FUNC – Selects the configurable right side display (Pressure Altitude, Flight Time, Count Up / Count Down Timers)
    - START / STOP - Starts and stops the Altitude Monitor, Count Up, Count Down, and Flight timers
    - CRSR - Initiates starting time entry for the Count Down timer and cancels transponder code entry
    - OFF – Power Off
    - STBY – Standby Mode

# *Design Approach (Cont)*

- IFF baseline will be modified to [Continued]
  - Remove 1553 bus interface
  - Provide aural cues for
    - “Leaving Altitude” – Altitude deviation selection is exceeded
    - “Timer Expired” for countdown timer
  - Traffic Information System (TIS) function will not be simulated
  - Configuration Mode will not be simulated
  - The GTX-330 will be simulated with Automated Airborne Determination
    - Automatic start/resume of Flight Time timer when aircraft takes off
    - Automatic pause of Flight Time timer when aircraft lands

# Context / Interface Diagram

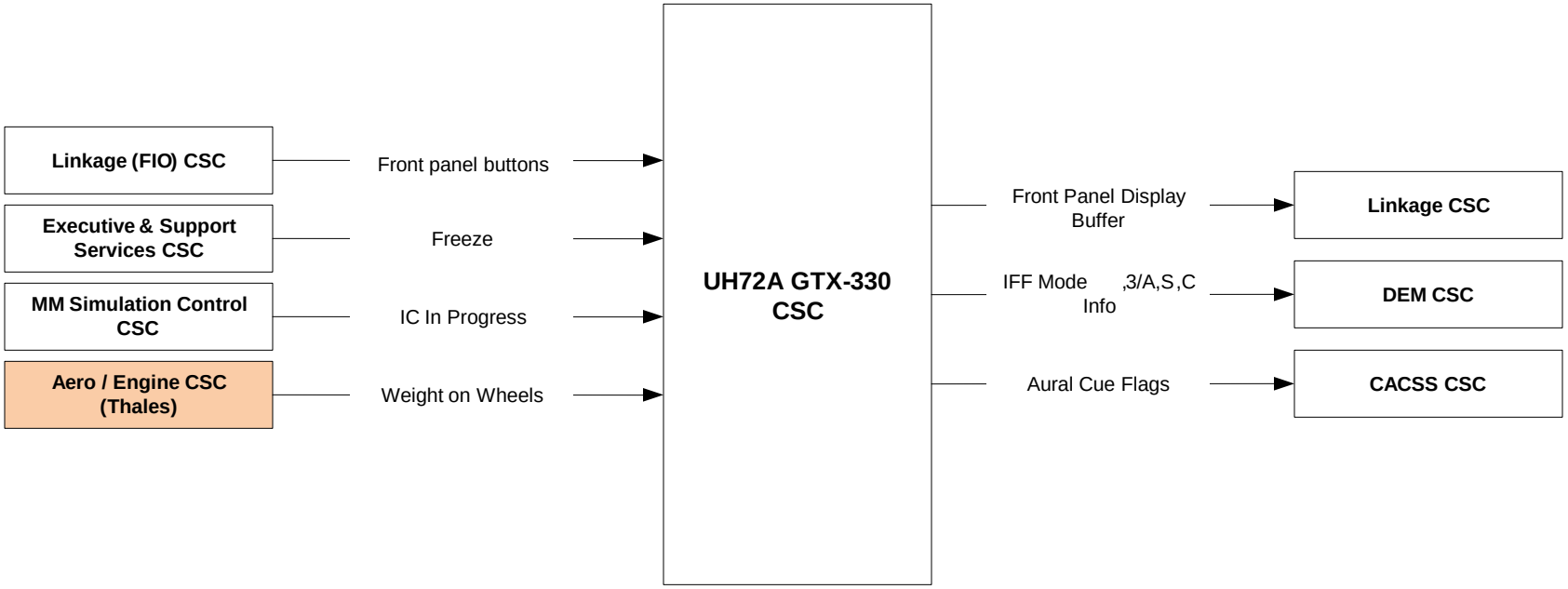

# *Overview*

- The BMC/AAR Exercise Management CSCs supports the UH-72A by providing the following functionality:
  - **Exercise Composition CSC:**
    - Provides the means to view and/or design the Initial Conditions for an exercise
  - **Exercise Control CSC:**
    - Coordinates all networked simulations to manage the trainer wide exercise
  - **Exercise Analysis CSC:**
    - Has two modes of execution, Live Monitor and Record/Playback, supports digital communications and collects/generates AAR reports for the debrief session
  - **Participant Station Communication Control CSC** (a.k.a. BMC Comm GUI)**:**
    - Sets up and controls audio communication between the seven participant stations (i.e. BMC, AAR, SAF and 4 Role Players)
  - **BMC DEM CSC:**
    - Transmits and receives DIS/V-DIS PDUs over the real-time network to and from other AVCATT and/or External systems while running/reviewing/monitoring an exercise on the BMC/AAR

# System Diagram

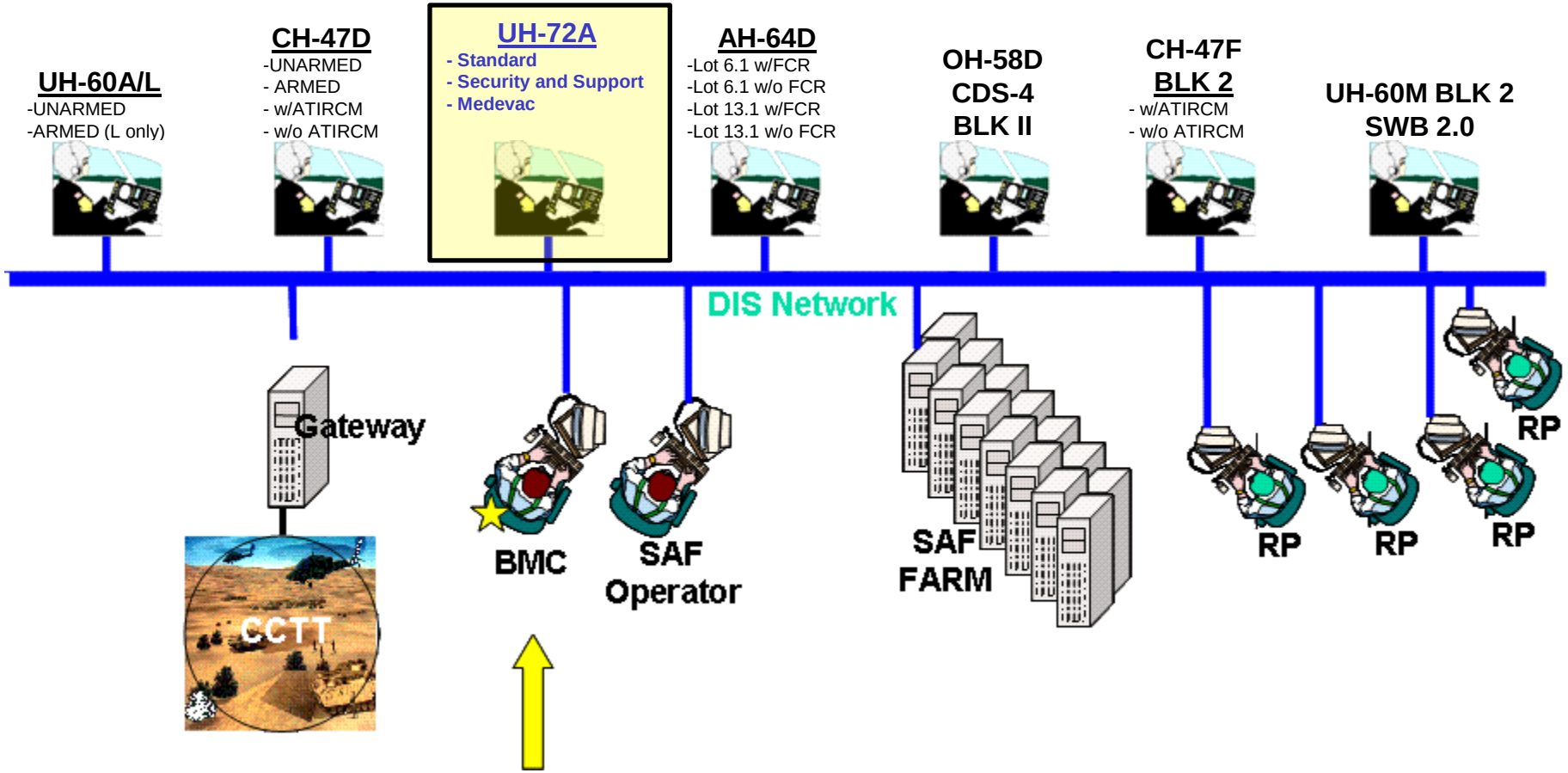

# Concept of Operation

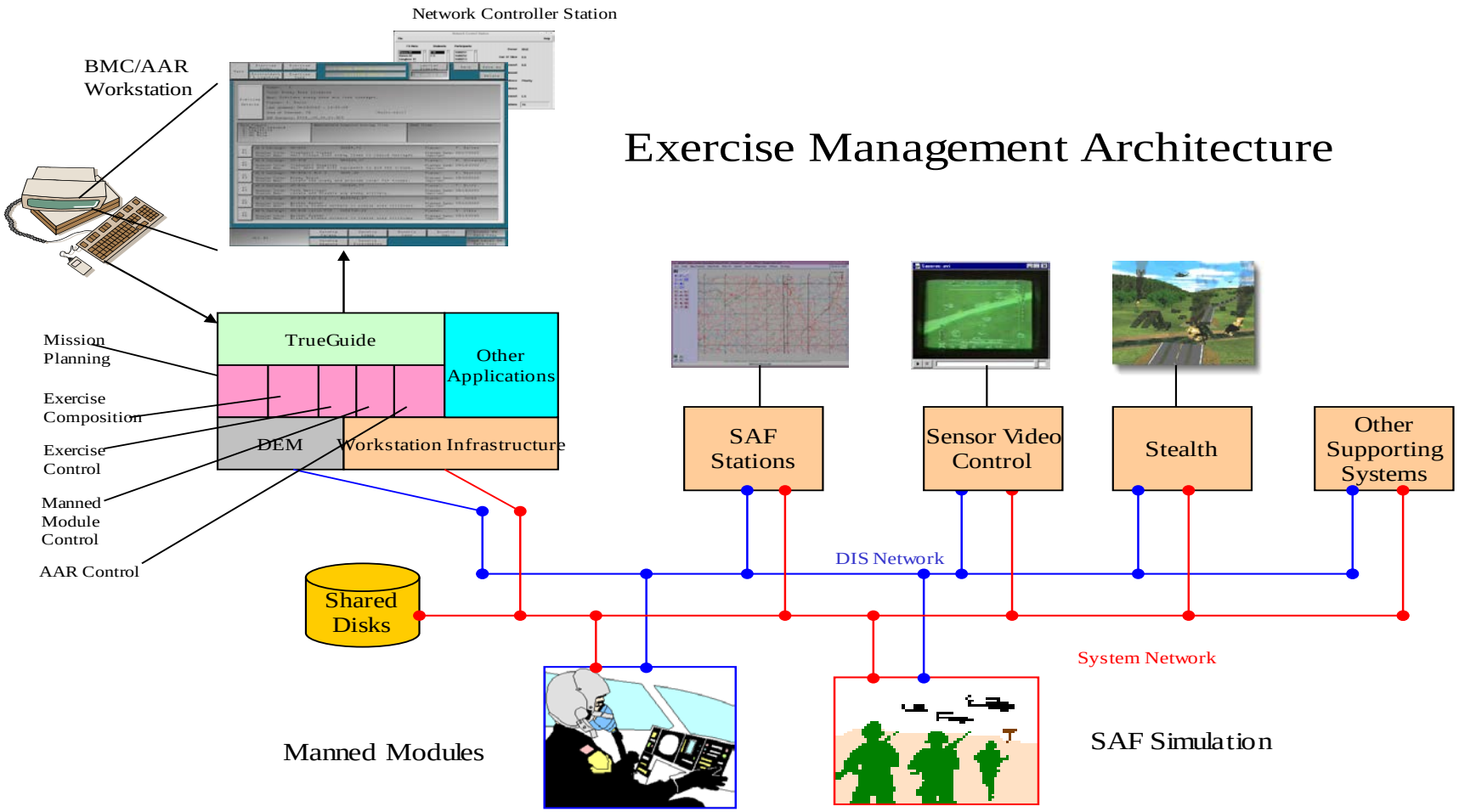

# Context / Interface Diagram

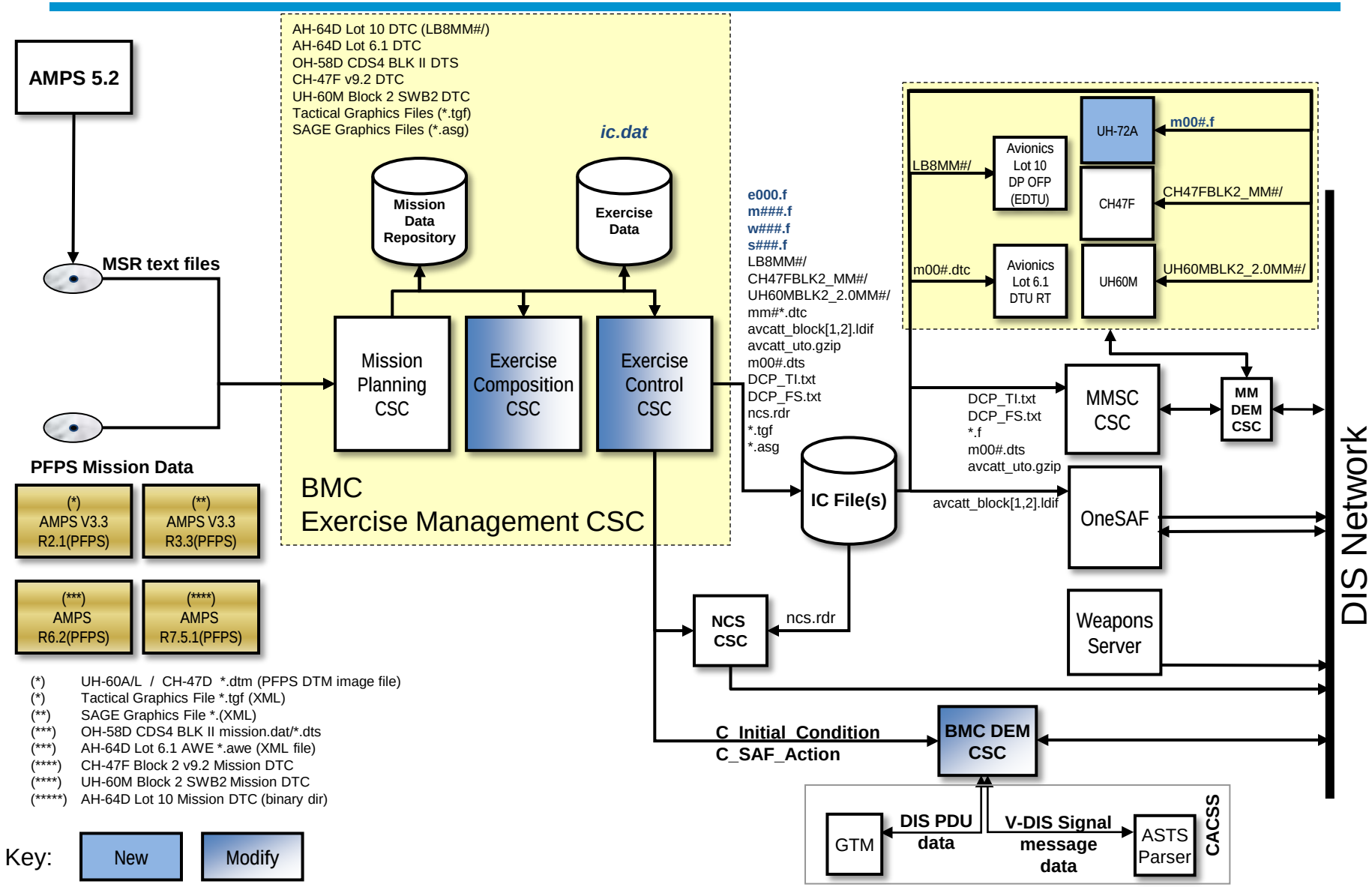

# *CSC Overview/Design Approach*

- Use ECP-078 / REL 14.00 BMC/AAR SW as the baseline
  - Reuse AVCATT UH-60M BLK2 BMC/AAR capabilities for UH-72A
  - Extend UH-60M Exercise Composition, Exercise Control and Exercise Analysis functionality to the UH-72A as applicable
- New Capabilities
  - Add support for 3 new UH-72A aircraft configurations
  - Add Ownship Comm and Global Comm Net support for 2 new radio types
  - Update DART to add support for the UH-72A

# CSC Overview/Design Approach

## UH-72A BMC/AAR Software Product Tree

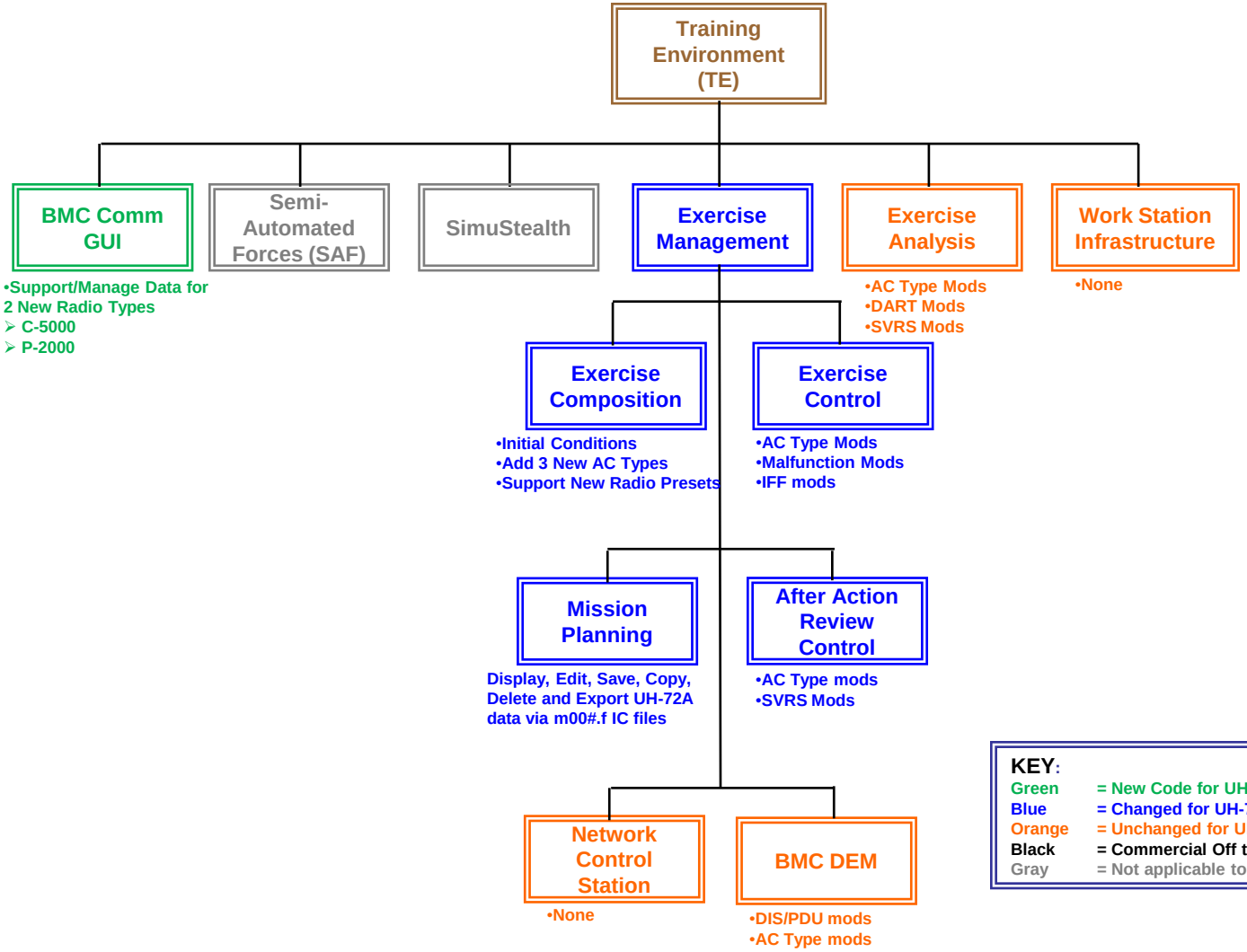


**KEY:**

| | |
|---|---|
| Green | = New Code for UH-72A (> 30% Change) |
| Blue | = Changed for UH-72A (>5% but <30% Change) |
| Orange | = Unchanged for UH-72A(<5% Change) |
| Black | = Commercial Off the Shelf |
| Gray | = Not applicable to this presentation |

# CSC Overview/Design Approach

## BMC Exercise Management Mission Data Imports

| Exercise Management AMPS/PFPS support | | | | | | |
|---|---|---|---|---|---|---|
| **Aircraft** | **Import AMPS MSR** | **Import AMPS DTC** | **Import PFPS A/W/E** | **PFPS Version** | **BMC Imported PFPS A/W/E File Formats** | **BMC Exported PFPS Formats for MM Initialization** |
| UH-60A/L | Yes | No | Yes | PFPS Army v3.3 release 2.1 | Binary *.dtm file (ASN-128 DTM ICD) | Saved into Text IC files (*.f) |
| CH-47D | Yes | No | Yes | PFPS Army v3.3 release 2.1 | Binary *.dtm file (ASN-128 DTM ICD) | Saved into Text IC files (*.f) |
| OH-58D CDS4 BLK II | No | No | Yes | PFPS Army release 6.2 | Binary *.dts file (IRS [IRS8521308-904] Appndx G - Rev M ICD) | Binary mission.dat file (IRS [IRS8521308-904] Appndx G - Rev M ICD format) (*.dts) |
| AH-64D Lot 6.1 | No | No | Yes | PFPS Army release 6.2 | XML *.awe file (No ICD or XML Schema Available) | Binary DTC file (AH-64D Lot 6.1 ICD format) (*.dtc) |
| AH-64D Lot 10 | No | No | Yes | PFPS Army release 6.2 | map/ and mission/ Directories containing binary *.cur files | LB10MM#/ Directory containing the PFPS mission/ and map/ directories of binary *.cur files (Boeing ICD - Lot 10 format with Endian conversions applied) |
| UH-60M Block 2 SW Build 2.0 | No | No | Yes | PFPS Army release 7.5.1 | MISSION/, map/ and TRAINING/ Directories containing a mix of ASCII and/or binary files supporting a variety of file type extensions | UH60MBLK2_2.0MM#/ directory containing the PFPS directories of binary and ASCII files (in a variety of file extensions) |
| CH-47F v9.2 | No | No | Yes | PFPS Army release 7.5.1 | comm/, decluter, flghtpln/, mission/, navaids/, tsa/, and waypoint/ directories containing binary files (in a variety of file extensions) | CH47FBLK2_MM#/ directory containing the PFPS directories of binary files (in a variety of file extensions) |
| **UH-72A** | **No** | **No** | **No** | **N/A** | **N/A** | **N/A** |

# *CSC Overview/Design Approach*

BMC/AAR
Exercise Composition
Updates

# *CSC Overview/Design Approach*

- BMC Exercise Composition Updates
  - Add support for 3 configurations of the UH-72A aircraft
    - Standard
      - RT-5000 and P-2000 Radios
    - Security and Support
      - Two RT-5000 radios with one control head
    - Medevac
      - RT-5000 radio and P-2000 Radio
  - Extend the following Exercise Composition pages to UH-72A and enable only the parameters associated with the UH-72A
    - Ownship Parameters (based on UH-60M implementation)
    - Ownship Loads (based on UH-60M implementation)
  - Disable selection of the Exercise Composition pages
    - Ownship Expendables page (chaff/flares not supported by UH-72A)
    - Ownship Weapons (weapons are not supported by UH-72A)
    - Ownship Nav (waypoints are not supported at the BMC for UH-72A – manually entered via the GNS430 in the MM)

# *CSC Overview/Design Approach*

- BMC Exercise Composition Updates (cont'd)
  - Update Exercise Composition Comm Pages to support UH-72A
    - Support selection and configuration of RT-5000 and P-2000 radios
    - ARC-231 Multi-band Radio Presets (based on UH-60M implementation)
  - Support for importing external mission or communications data at the BMC will not be provided for the UH-72A (i.e. PFPS mission data)

# CSC Overview/Design Approach

- New BMC Exercise Composition Pages for UH-72A
  - Add new radio presets configuration page for the RT-5000 radio
    - BMC supports up to 100 preset channels.
    - Preset data is common between the RT-5000 Radios

| Preset | Chan. | Call Sign | TX Freq | RX Freq | TX Tone | RX Tone | Modulation | Exercise Comm Net |
|---|---|---|---|---|---|---|---|---|
| 1 | 85 | SHERIFF | 154.800 | 154.800 | 01 | 01 | FM | Add Net |
| 2 | 14 | MEDIC | 460.425 | 460.425 | 08 | 08 | FM | Add Net |
| 3 | 24 | FIRE | 152.375 | 152.375 | 15 | 15 | FM | Add Net |
| 4 | 44 | BASE | 230.125 | 230.125 | 025 | 025 | AM | Add Net |
| 5 | 45 | AIRFIELD | 310.474 | 310.474 | 466 | 466 | AM | Add Net |
| 6 | 46 | TOC | 257.000 | 257.000 | 122 | 122 | AM | Add Net |
| 7 | | | | | | | | |
| 8 | | | | | | | | |
| 9 | | | | | | | | |
| 10 | | | | | | | | |

<- Show Prev 10 Show Next 10 ->

# CSC Overview/Design Approach

- New BMC Exercise Composition Pages for UH-72A (cont'd)
  - Add new Scan Group configuration page for the RT-5000 radio
    - BMC supports up to 20 scan groups
    - The scan groups are common between the RT-5000 Radios

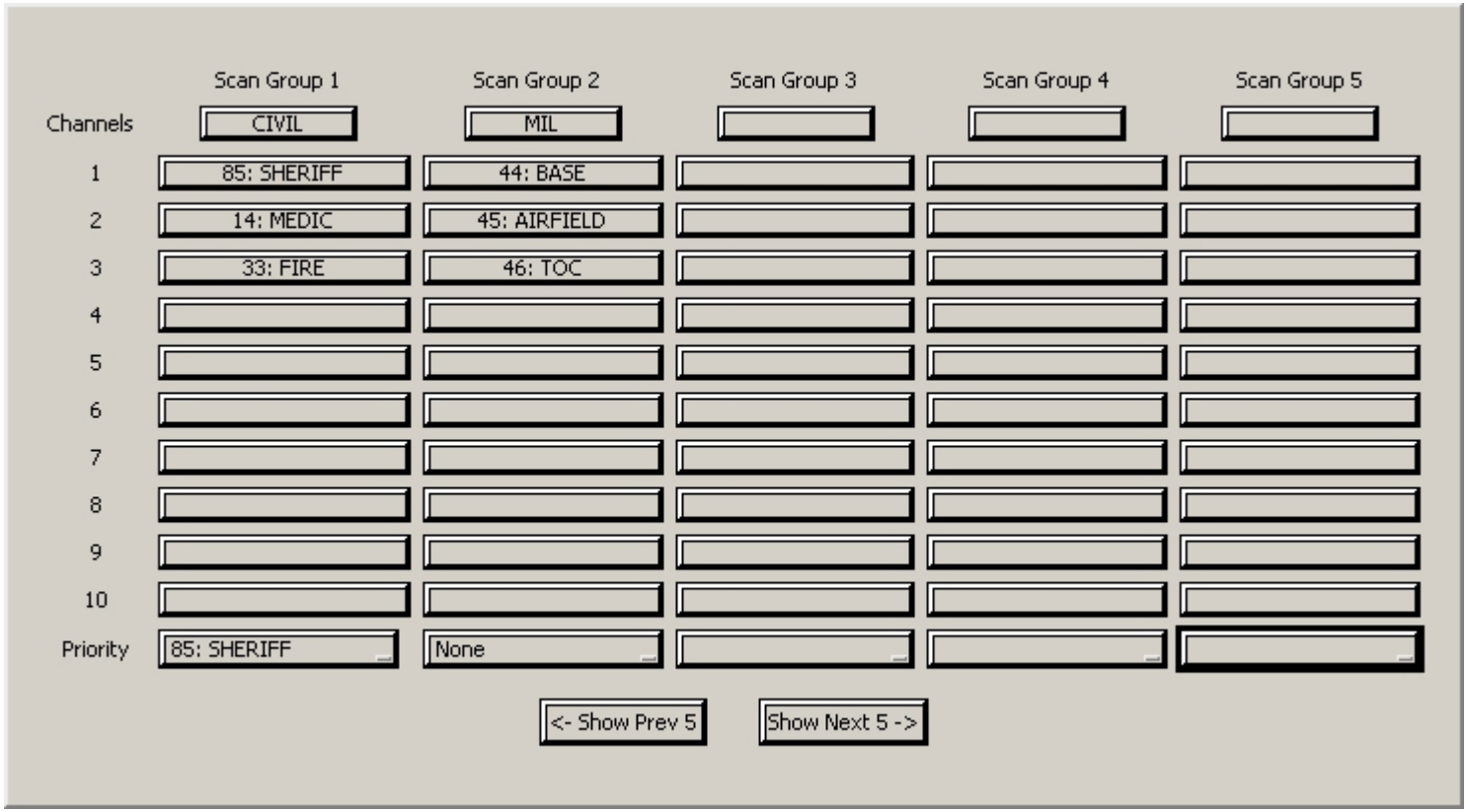

# CSC Overview/Design Approach

- New BMC Exercise Composition Pages for UH-72A (cont'd)
  - Add new radio presets configuration page for the P-2000 radio
    - BMC supports up to 100 preset channels in the IC set
    - Preset data is common between the P-2000 Radios

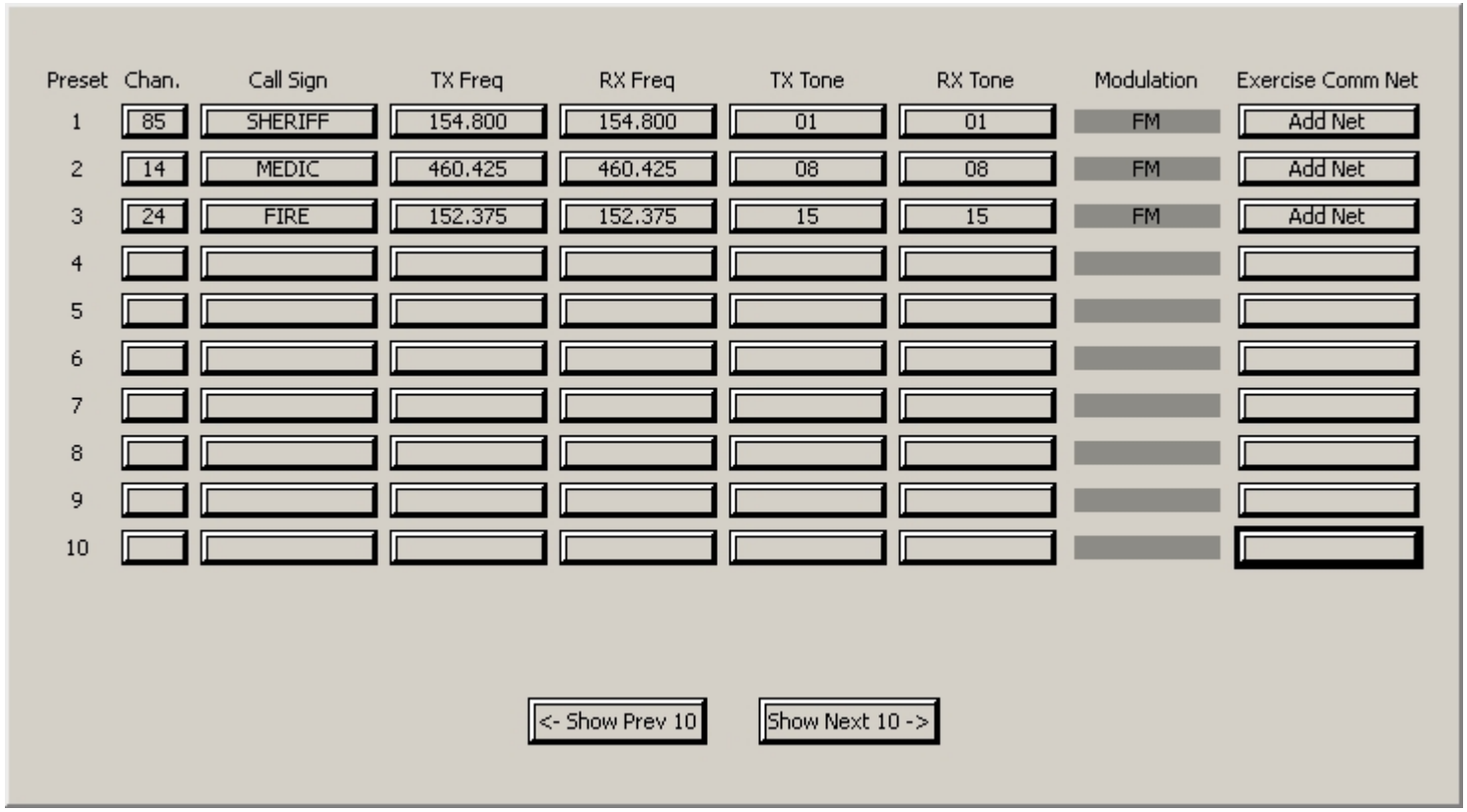

| Preset | Chan. | Call Sign | TX Freq | RX Freq | TX Tone | RX Tone | Modulation | Exercise Comm Net |
|---|---|---|---|---|---|---|---|---|
| 1 | 85 | SHERIFF | 154.800 | 154.800 | 01 | 01 | FM | Add Net |
| 2 | 14 | MEDIC | 460.425 | 460.425 | 08 | 08 | FM | Add Net |
| 3 | 24 | FIRE | 152.375 | 152.375 | 15 | 15 | FM | Add Net |
| 4 | | | | | | | | |
| 5 | | | | | | | | |
| 6 | | | | | | | | |
| 7 | | | | | | | | |
| 8 | | | | | | | | |
| 9 | | | | | | | | |
| 10 | | | | | | | | |

# *CSC Overview/Design Approach*

Exercise Control
Updates

# *CSC Overview/Design Approach*

- BMC Exercise Control Updates for UH-72A
  - Extend the Exercise Control Malfunctions page to enable
    - Chips Main XMSN malfunction
  - Extend the IFF parameters on the Exercise Control Ownship Parameter page
    - Display GTX-330 parameters using existing display (Mode 3/A)
  - Extend the Exterior Lighting parameters on the Exercise Control Ownship Parameter page

# *CSC Overview/Design Approach*

Exercise Analysis
Updates

# *CSC Overview/Design Approach*

- BMC Exercise Analysis Updates for UH-72A
  - Update nomenclature of sensor video selections for the UH-72A
  - Update DART to align with latest versions of the SE CORE Master Entity List (MEL) to recognize the new UH-72A platforms

| Aircraft | Node 1 | Node 2 | Node 3 | Node 4 | Node 5 | Node 6 | Node 7 |
|---|---|---|---|---|---|---|---|
| UH-72A S&S | CPLT VDU | CPLT PFD / ND | PILOT PFD / ND | PILOT VDU | MX-15i FLIR | CPDS (CAD / VEMD) | MX-15i CoTV |
| UH-72A Standard, Medevac | CPLT VDU | CPLT PFD / ND | PILOT PFD / ND | PILOT VDU | PILOT OTW / NVG | CPDS (CAD / VEMD) | CPLT OTW / NVG |

# *CSC Overview/Design Approach*

BMC DEM
Updates

# *CSC Overview/Design Approach*

- BMC DEM
  - Add support for new Ownship data communicated between the UH-72A Host MM DEM and the BMC DEM

# *CSC Overview/Design Approach*

BMC COMM GUI
Updates

# CSC Overview/Design Approach

- BMC Comm GUI
  - Update to support configuring/selecting Radio Presets for the 2 new UH-72A

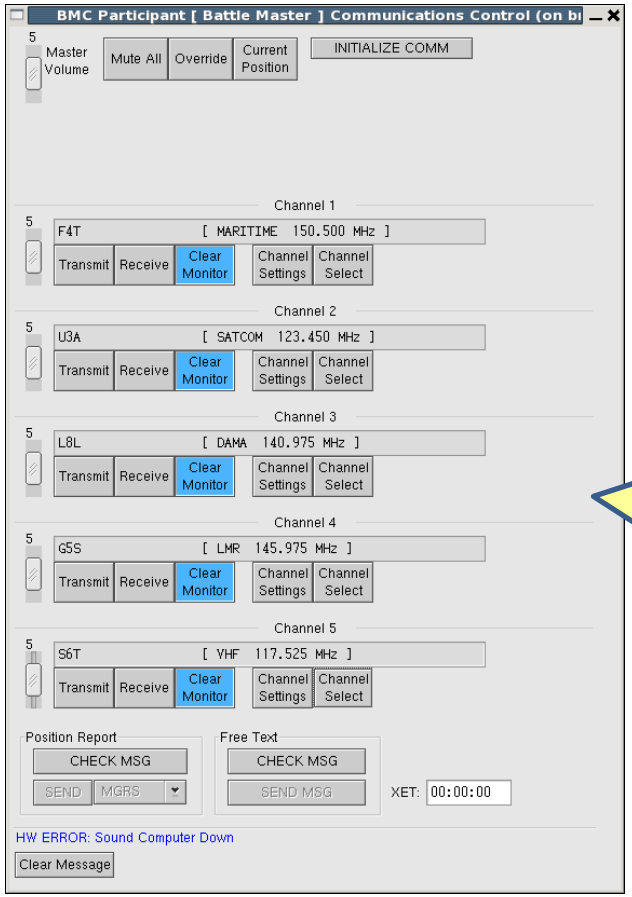


Update BMC Comm GUIs to support the 2 new radio bands (C-5000 and P-2000) and all pertinent data.

# *AVCATT Simulation System Architectural Context*

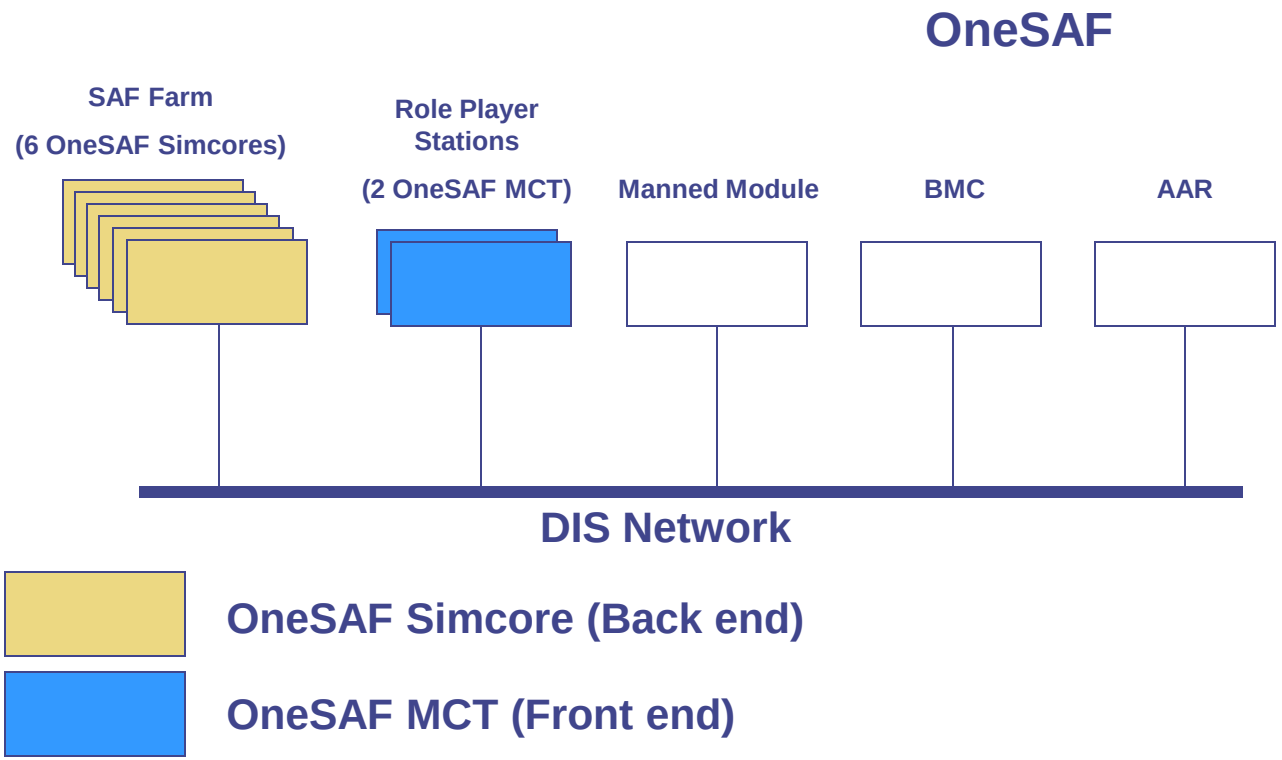

# *Design Approach*

- Basic UH-72A RWA entities are being added under AVCATT SE Core:
  - UH-72A
  - UH-72A Medevac
  - UH-72A SS

- New PVD icons will be designed for each model.

- Current OneSAF Entity that the UH-72A entities will be modeled on:
  - /ext/secore/compositions/entity/mr/COMBAT/AVIATION/ROTARY_WING/UH72A_LUH_Lakota.xml
  - This is a currently existing core OneSAF composition that was a copy/paste of the OH-58D Kiowa.

- Additional effort is required to equip the UH-72A entities with the MX-15i sensor, sling load, rescue hoist, and water bucket functionality
  - NCM3 sling load, rescue hoist and water bucket behaviors will be reused for the UH-72A

# *Design Approach*

- These entities will include all basic RWA behaviors as well as:
  - Behavior: entityHoist_CB.xml

- These entities will include all basic RWA physical components as well as:
  - Physical Component: Sling Carrier Capability (1Hook)
  - Physical Component: Carrier Compontent, Passenger Component
  - Physical Component: EyeVision_Unaided_Sensor
  - Physical Component: Goggles_NightVision_NVG_Sensor
  - Physical Component: NEW sensor for MX 15i

- All of the listed component files, except for the MX 15i, currently exist in OneSAF and will not require modification. The MX 15i will be a new component.

# *Design Approach*

- New lighting requirements will require an update to the exterior lighting UI for the UH-72A.
  - Lighting choices:
    - Anti-Collision ON/OFF Default: ON
    - Anti-Collision2 RED/NVG Default: RED
    - Position ON/OFF Default: ON
    - Spot ON/OFF Default: OFF

- No digital communications

# *Concept of Operation*

- Rescue Hoist
  - Rescue hoist NCM3 baseline will be reused without modification
  - Hoist load will auto-attach; MM will automatically winch the load without crew intervention
  - Cable cut functionality will be commanded by the MM

- Water Bucket
  - Water Bucket NCM3 baseline will be reused without modification
  - AVCATT MM will command water bucket dump via VDIS interface
  - Water bucket fill is handled by the MM logic

- Sling Load
  - Operation will be identical to UH-60M

# *PDSS SE Core Integration Scope*

- Integrate and test models and databases related to UH-72A delivered by the SE Core program
- Develop, integrate, and test behavior analysis definition and support based on the given training tasks as well as data provided by the government SMEs related to UH-72A program

# *Overview*

- The South Carolina Army National Guard utilizes the UH-72A aircraft for low-level flight maneuvers and emergency procedures in scenarios including disaster relief, medical evacuation, personnel recovery, and counter-narcotics operations.
- These types of operations are outside of the traditional military tactical scenarios supported through OneSAF.
- Use case analysis is being conducted with SC ARNG field operational SMEs to identify the operational aspects, role players, behaviors and supporting entities to build effective AVCATT training scenarios.
- Existing OneSAF behaviors will be utilized for basic command and control operations.
- Gap analysis will identify future opportunities for increased realism in close quarters interactions involving SAF human life forms and the associated CM2 model visual animation sequences.

# *Operational Training Scenario Support*

- Effort leverages the integration of SE Core CM2 visual models with corresponding OneSAF model compositions in support of the following prioritized scenarios:
  - Border Patrol
    - Drug Smuggling
  - Hurricane
  - Flood
  - Tornado
  - Urban
  - Plant Disaster
  - Coastal
  - Avalanche / Snow Search
  - Forest Fire
  - Train Crash

# *Use Case Analysis / Scenario Timeline*

- The UH-72A Pilot SMEs provides detailed accounts of how each operational training scenario typically transpires.
- Use case analysis identifies the use case actors and the associated actions describing what each actor does.
- A scenario timeline and narrative is constructed depicting the flow of the OneSAF operational training scenario in terms of actors, actions and role players.
- Actor behaviors are identified that require higher levels of autonomy outside of the capabilities currently provided by OneSAF.
- Absence of behavioral capabilities require a work around during scenario development, potentially necessitating the use of role players to augment the behavioral characteristics provided by OneSAF entities.

# SC ARNG Operational Training Workflow

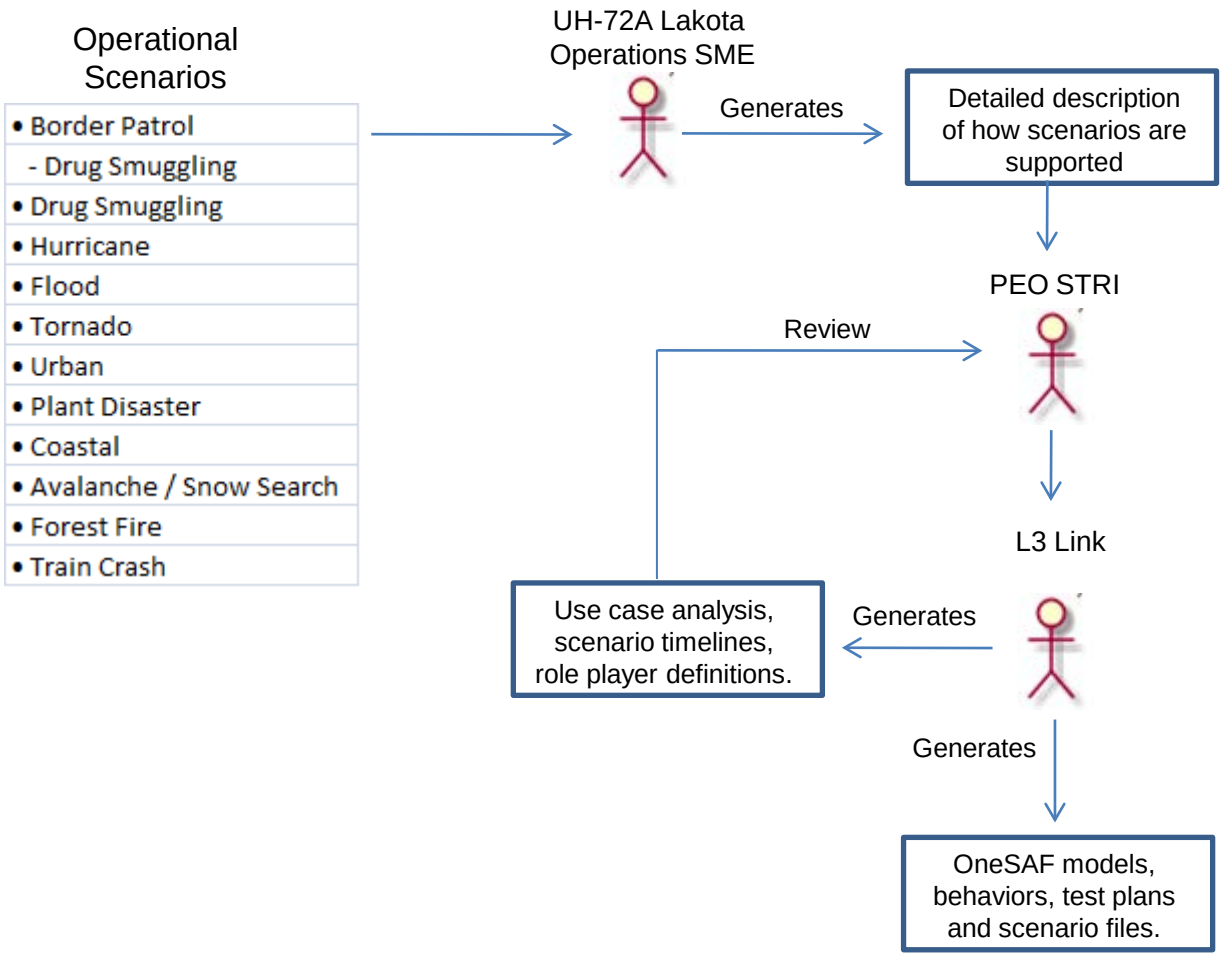

# Border Patrol Scenario - Use Case Example

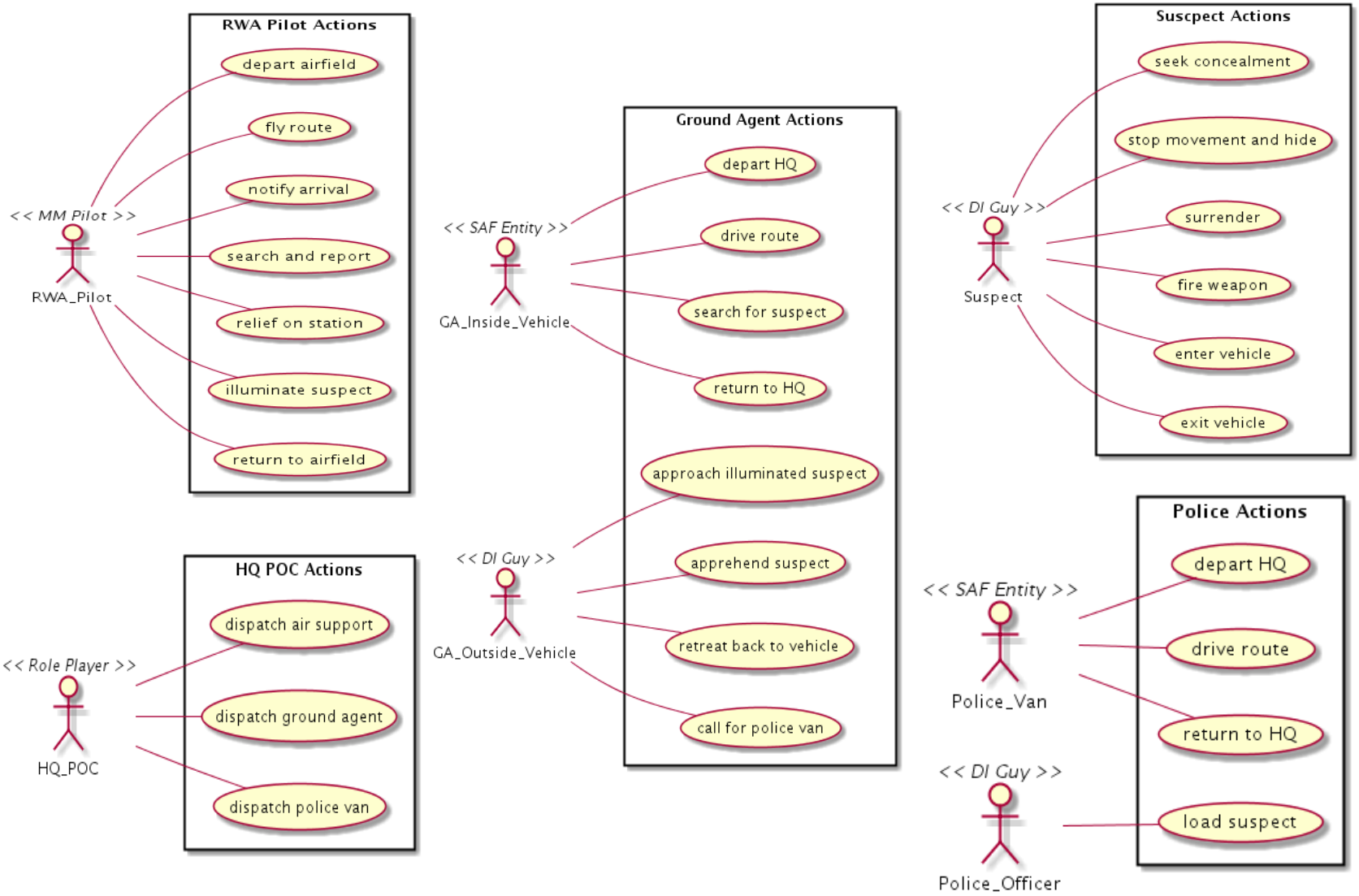

# *Border Patrol – Scenario Timeline Example*

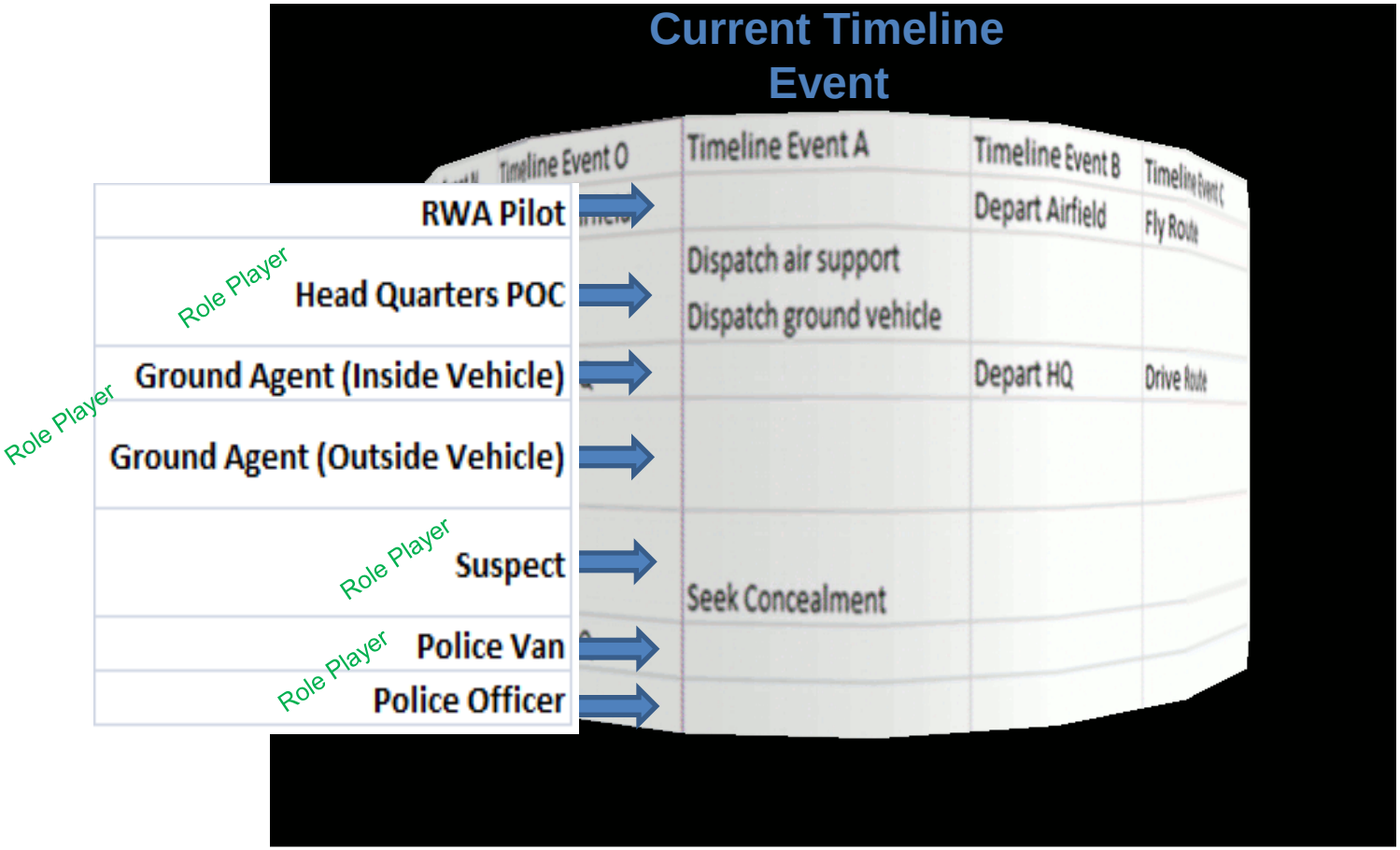


[ brackets ] indicate variability in the occurrence of an event

# *SE Core Terrain Database*

- Beginning with Ft Bragg, SE Core Terrain Databases will add additional features to facilitate ARNG training scenarios
  - Houses with multiple states
  - Tree clusters with healthy/damage states
  - Specific nuclear power plants
  - Static flood water
  - Static snow mounds
- Houses and tree clusters will have UUIDs (Universally Unique Identifiers) defined by the SORD (Simulation Object Runtime Database) having accessibility similar to UHRBs (Ultra High Resolution Buildings) and destroyable bridges
- All disasters, with the exception of forest fires will be modeled in the database as a static scene AFTER the disaster occurs
- SE Core will provide AVCATT with a Ft Bragg that has larger extents specifically for ARNG (interop will not be available to other programs for areas beyond typical Ft Bragg extents)

# *SE Core Terrain Database Features*

- Trees

Normal

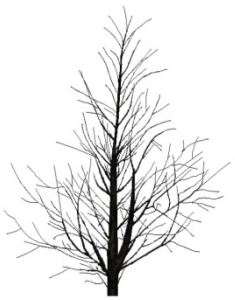

Burned

- Houses

Normal

Damaged

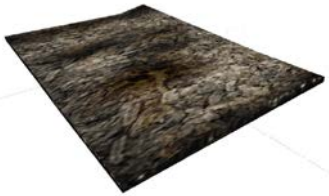

Destroyed

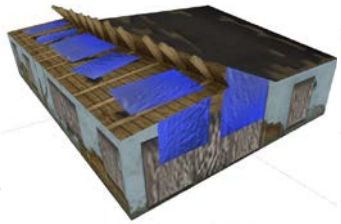

Repaired

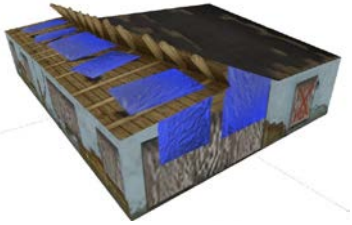

Inspected

# *SE Core Terrain Database*

| ARNG Scenario | SE Core TDB |
|---|---|
| Border Patrol | Can be staged in any database for now<br>Should be a future update to Ft Bliss |
| Hurricane | Ft Bragg – Myrtle Beach area will be populated with houses |
| Flood | Ft Bragg – Static water in Columbia – tentative |
| Tornado | Ft Bragg – Augusta area will be populated with houses |
| Urban | Can be staged in a TDB with an urban area |
| Plant Disaster | Ft Bragg – Savannah area will include nuclear plant<br>JBLM – will include nuclear plant |
| Coastal | Ft Bragg – coastline of the Carolinas |
| Avalanche/Snow Search | JBLM – designated area |
| Forest Fire | Ft Bragg – NW extent |
| Train Crash | Can be staged in a TDB with train tracks |

# *SE Core CM2 Model List by ARNG Training Task*

| Priority | Training Task | CM2 Model | Visual Model Delivery Date |
|---|---|---|---|
| 1 | Border Patrol | Drug Bail (2X3 stack) | 5/23/2014 |
| 1 | Border Patrol | Drug Bail (1 stack) | 5/23/2014 |
| 1 | Border Patrol | BP Jeep Wrangler | 4/25/2014 |
| 1 | Border Patrol | Chevy S10 pickup with a large, air-pressure "bazooka" in the bed | 4/25/2014 |
| 1 | Border Patrol | Chevy Tahoe with BP paint job | 3/28/2014 |
| 1 | Border Patrol | Ford Crown Victoria with BP paint job | 3/28/2014 |
| 1 | Border Patrol | Ford Econoline Van with BP Paint Job | 4/25/2014 |
| 1 | Border Patrol | Ford F150 extended cab with BP paint job | 3/28/2014 |
| 1 | Border Patrol | Makeshift Ladder | 5/23/2014 |

# *SE Core CM2 Model List by ARNG Scenario*

| Priority | Training Task | CM2 Model | Visual Model Delivery Date |
|---|---|---|---|
| 2,3,4,5,6 | Urban Chase/ Disaster response | Chevy Suburban with police markings | 3/28/2014 |
| 2,3,4,5,6 | Urban Chase/ Disaster response | Dodge Charger with police markings | 3/28/2014 |
| 2,3,4,5,6 | Urban Chase/ Disaster response | Ford Crown Victoria with police markings | 3/28/2014 |
| 2,3,4,5,6 | Urban Chase/ Disaster response | GMC Horton Truck Ambulance | 3/28/2014 |
| 2,3,4,5,6 | Urban Chase/ Disaster response | GMC Topkick with TECO Digger Derrick | 3/28/2014 |
| 2,3,4,5,6 | Urban Chase/ Disaster response | Modified International utility truck with crane and operator bucket | 3/28/2014 |
| 2,3,4,5,6 | Urban Chase/ Disaster response | Sutphen Commercial Pumper on a International 4400 Chassis | 4/25/2014 |
| 2,3,4,5,6 | Urban Chase/ Disaster response | Sutphen SP70 Fire Engine | 4/25/2014 |
| 2,3,4,5,6 | Urban Chase/ Disaster response | Sutphen SPH100 Fire Engine | 4/25/2014 |

# SE Core CM2 Model List by ARNG Scenario

| Priority | Training Task | CM2 Model | Visual Model Delivery Date |
|---|---|---|---|
| 7 | Coastal Patrol | Makeshift Raft | 5/23/2014 |
| 7 | Coastal Patrol | Narco Submarine | 5/23/2014 |
| 7 | Coastal Patrol | C-130 with USCG paint job/equipment | 3/28/2014 |
| 7 | Coastal Patrol | CASA HC-144A Ocean Sentry | 4/25/2014 |
| 7 | Coastal Patrol | CBP Midnight Express Interceptor High Speed Boat | 5/23/2014 |
| 7 | Coastal Patrol | Defender-Class Boat (USCG Response Boat - Small) | 4/25/2014 |
| 7 | Coastal Patrol | Donzi 38 ZR | 5/23/2014 |
| 7 | Coastal Patrol | HH-60J Jayhawk with USCG paint job | 4/25/2014 |
| 7 | Coastal Patrol | HH-65 Dolphin | 4/25/2014 |
| 7 | Coastal Patrol | HU-25 with USCG paint job/equipment | 3/28/2014 |
| 7 | Coastal Patrol | Keeper-Class Coastal Bouy Tender | 5/23/2014 |
| 7 | Coastal Patrol | Legend-class National Security Cutter (High Endurance Cutter WHEC) | 4/25/2014 |

# *SE Core CM2 Model List by ARNG Scenario*

| Priority | Training Task | CM2 Model | Visual Model Delivery Date |
|---|---|---|---|
| 7 | Coastal Patrol | Marine-Class Coastal Patrol Boat | 5/23/2014 |
| 7 | Coastal Patrol | Recommmend an Island-Class Patrol Boat | 5/23/2014 |
| 7 | Coastal Patrol | Reliance-class Medium Endurance Cutter (WMEC) | 4/25/2014 |
| 7 | Coastal Patrol | Sentinel-Class Fast Response Cutter | 5/23/2014 |
| 7 | Coastal Patrol | USCG Long Range Interceptor | 4/25/2014 |
| 7 | Coastal Patrol | USCG Response Boat-Medium (RB-M) | 4/25/2014 |
| 7 | Coastal Patrol | USCG Short Range Prosecutor | 4/25/2014 |
| 7 | Coastal Patrol | Offshore Oil Platform | 5/23/2014 |
| 8 | Avalanche | Bombardier BR180 Snowcat | 5/23/2014 |
| 8 | Avalanche | Pisten Bully 300 Polar Snowcat | 5/23/2014 |
| 8 | Avalanche | Sterling ACTERRA Snow Plow Truck | 5/23/2014 |

# *SE Core CM2 Model List by ARNG Scenario*

| Priority | Training Task | CM2 Model | Visual Model Delivery Date |
|---|---|---|---|
| 9 | Forest Fire | Bell 212 w/ Bambi Bucket | 3/28/2014 |
| 9 | Forest Fire | Brush Truck on a Ford F550 Chassis | 3/28/2014 |
| 9 | Forest Fire | Ford F150 extended cab with USFS paint job | 3/28/2014 |
| 9 | Forest Fire | Ford F150 extended cab with US Park Ranger paint job | 3/28/2014 |
| 9 | Forest Fire | Lockheed P-3A Orion or BAE 146 Air Tanker | 3/28/2014 |
| 9 | Forest Fire | Modified International 7400 4x4 truck (Heavy Brush Truck) | 3/28/2014 |
| 9 | Forest Fire | Modify existing UH-60 with fire hawk attachment | 3/28/2014 |
| 9 | Forest Fire | Sikorsky S-64 Skycrane (Erickson Air-Crane) | 3/28/2014 |
| 10 | Train Wreck | Coal Hopper Car | 3/28/2014 |
| 10 | Train Wreck | Platform Car (with alt states for freight - pipe, truck trailer, logs) | 3/28/2014 |
| 10 | Train Wreck | Tank Car | 3/28/2014 |

# *Basic Behavior Stereotypes for CM2 SAF Models*

| Ground | Fixed Wing | Rotary Wing | Watercraft | Submarine |
|---|---|---|---|---|
| Cargo Mount Dismount | Cargo Mount Dismount | Cargo Mount Dismount | Cargo Mount Dismount | Cargo Mount Dismount |
| Traveling | Mount or Dismount | Mount or Dismount | Follow Route | Follow Route |
| Halt Movement | FWA Fly Route | RWA Fly Route | Halt Movement | Halt Movement |
| Tether | FWA Orbit | RWA Orbit | Tether | Surface / Dive |
| Mount or Dismount | FWA Tether | RWA Tether | Mount or Dismount | Mount or Dismount |
| | | RWA Hover | | |
| | | RWA Land | | |

Proposed new command and control behaviors in green.

Additional specialized behaviors and role players are being identified through use case analysis in coordination with PEO STRI and SC ARNG to support future enhancements for increased realism.

# *Assumptions / Future Enhancements*

- Based on budget and schedule constraints, one or more role players will be heavily utilized in AVCATT training exercises controlling the dynamic aspects of entity behavior (outside of scenario creation) in contrast to SAF entities operating under higher levels of autonomy.
- Future enhancements leveraging technology outside of OneSAF might be considered for training scenarios involving close quarters interactions amongst human life forms.
- The tight coupling between artificial intelligence and behaviors, 3D visual states and animation sequences lends itself towards the use of products such as VBS2 (Virtual Battlespace 2) in which these aspects can be coordinated under fine-grained, closed-loop control.

# Synthetic Environment Core (SE Core)

# ARNG Terrain and Common Moving Model (CM2) Development

24 March 2014

# *ARNG Training Scenarios*

- As part of the effort to include the UH-72 configuration within AVCATT, the ARNG has funded databases that complement their training objectives. The following guidance has been provided to SE Core:

**Training Scenarios:**

- **Border Patrol**
- **Hurricane**
- **Flood Response**
- **Tornado Response**
- **Urban Search**
- **Power Plant Disaster**
- **Coastal Search**
- **Avalanche/Snow Search and Rescue**
- **Forest Fire Response**

# *SE Core Development Approach*

- SE Core has begun work to include the ARNG capabilities into upcoming Integrated Training Environment (ITE) databases. Training scenarios will be built into the following databases:

**Ft Bragg***

- **Hurricane**
- **Flood Response**
- **Tornado Response**
- **Urban Search**
- **Coastal Search**
- **Forest Fire Response**

***Extents have been expanded beyond the original ITE requirements to accommodate ARNG scenarios**

**Joint Base Lewis McChord (JBLM)**

- **Power Plant Disaster**
- **Avalanche/Snow Search and Rescue**

**Ft Bliss**

- **Border Patrol**

# SE Core : Ft Bragg – May 2014

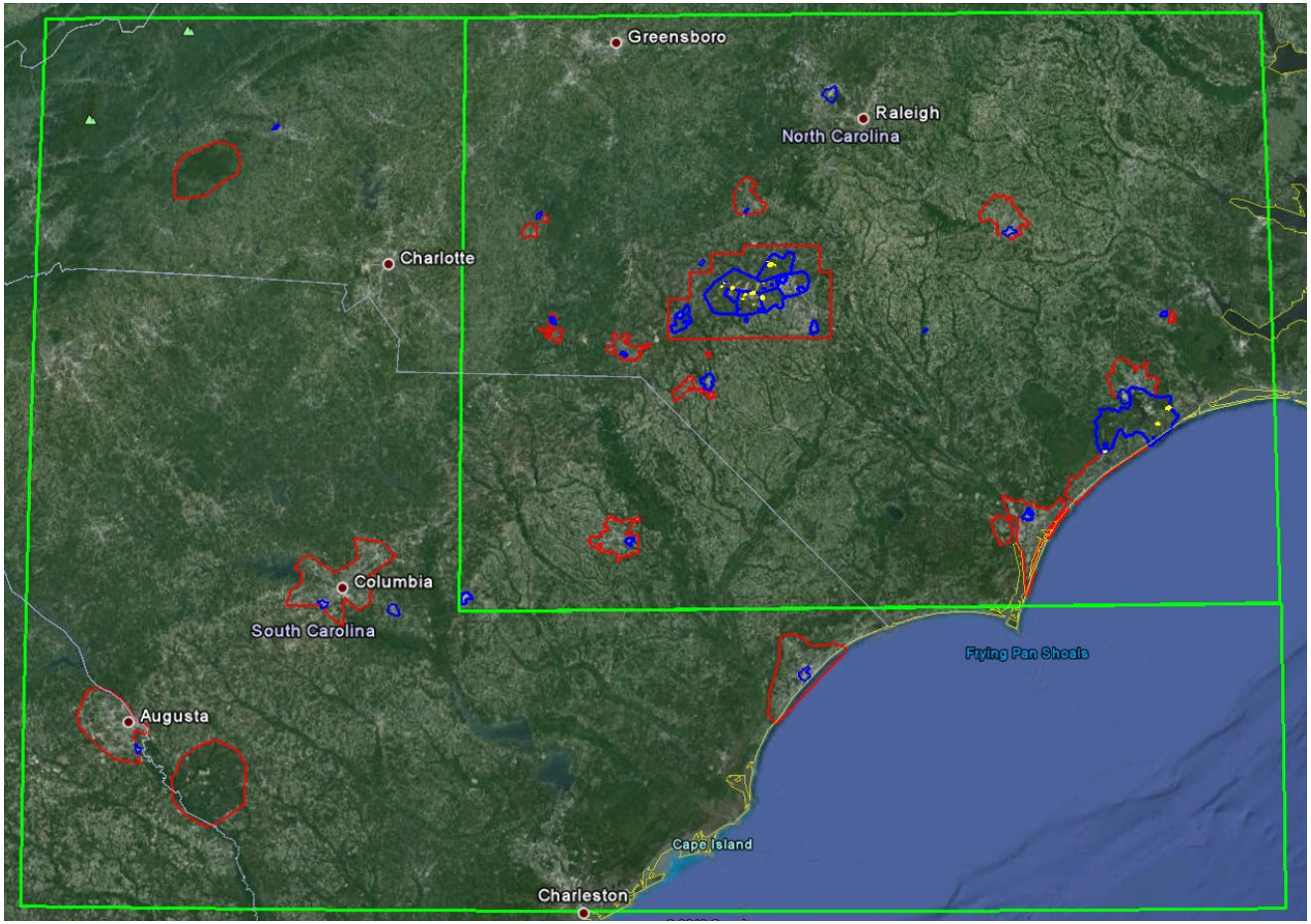


- The smaller green box represents the ITE extents, the larger green box shows the ARNG expansion.
- Myrtle Beach, Augusta and Columbia are being populated with “disaster” building models which can toggle between various healthy and damaged states to represent Hurricanes and Tornadoes.
- The Bragg database will include the Savannah River Site Power Plant which can be used for Power Plant disaster scenarios.
- South Mountains State Park is being populated with forest fire tree models that can be toggled between healthy and burned.
- Database contains 400km of coastline to support maritime operations.

# SE Core : JBLM – July 2014

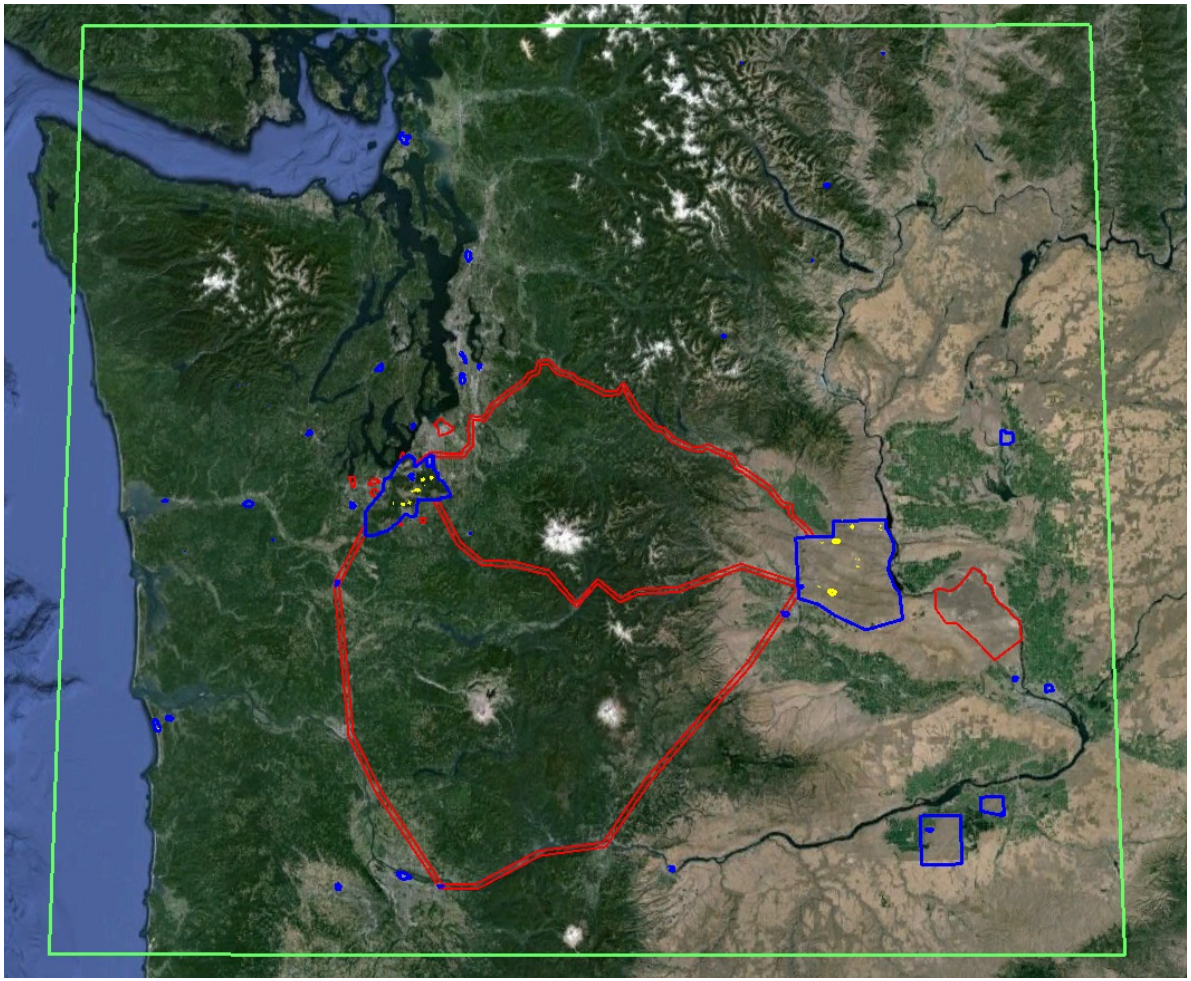

- The green box represents the database extents.
- The JBLM database will include a winter season variant that has the potential to support avalanche scenarios.
- The JBLM database will include the Satsop Power Plant which can be used for Power Plant disaster scenarios.

# SE Core : Ft Bliss – December 2014

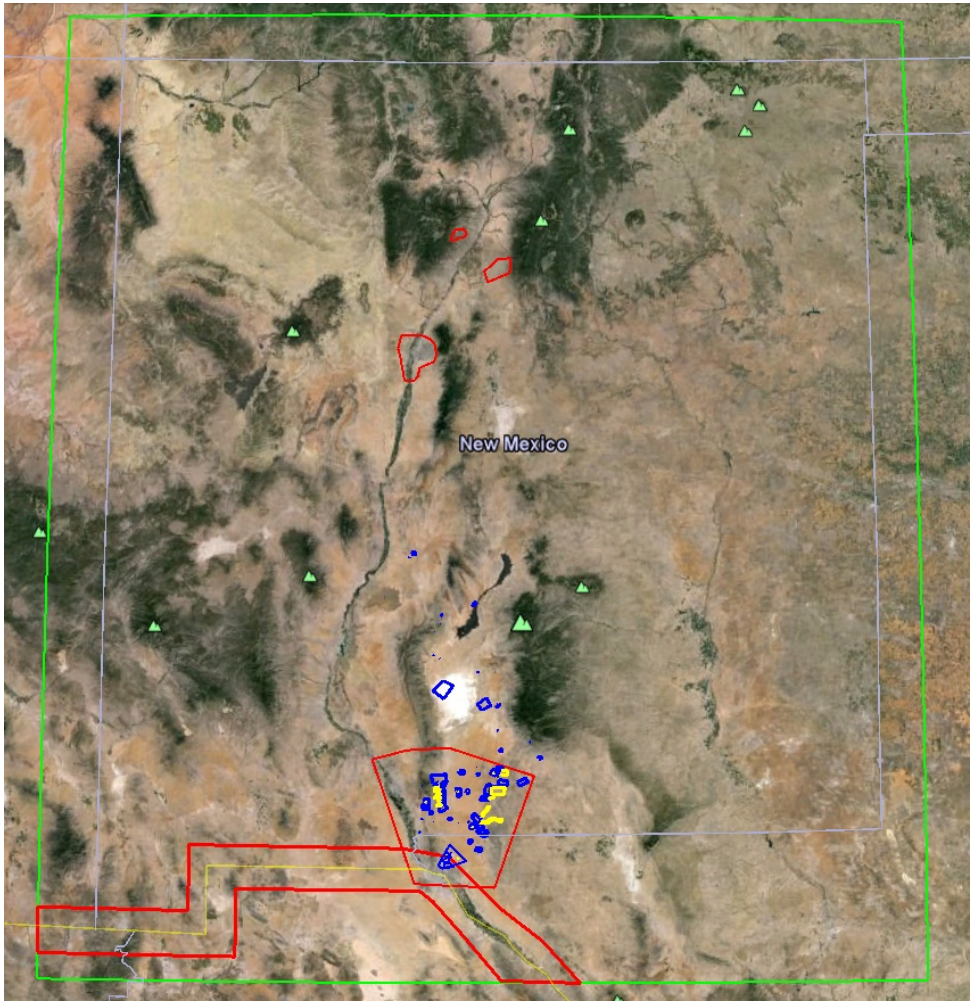


The green box represents the database extents.

The data content along the border between the United States and Mexico will be collected at a higher fidelity (1:50,000) than the surrounding area (1:250).

Generic buildings, plants and textures will be developed to be regionally specific.

3-5 Ultra High Resolution buildings (buildings with interiors) will be developed and randomly dispersed within urban areas along with the generic buildings mentions above.

# *Common Moving Models*

- Common Moving Model (CM2) Development
- SE Core is currently developing models to supplement the terrain database and enhance the training scenarios.  The first lot of models is nearing completion and Vehicle Description Documents (VDDs) have begun on the second lot.

# *Common Moving Models*

Lot 1 – March 2014

ford_f150_parkranger
ford_f150_forestservices
ford_f150_borderpatrol
ford_f550_brush_truck
int7400_heavy_brush_truck
p3a_firefighter_fwa
bell212_firefighter_rwa
s64_firefighter_rwa
uh60_firehawk
ford_crown_victoria_police
ford_crown_victoria_bp
dodge_charger_police
chevy_suburban_police
chevy_suburban_bp
train_tank_car
train_platform_car
train_coal_car
ford_f450_ambulance
gmc_topkick_tree_truck
utility_truck
uscg_c130
uscg_hu25

**Lot 2 – April 2014**

**fire_engine_sutphen_sp70**
**fire_engine_sutphen_sph100**
**fire_engine_sutphen_commpumper**
**ford_econoline_bp**
**jeep_wrangler_bp**
**uscg_hh60j**
**uscg_hh65**
**uscg_hc144a**
**uscg_legend_class_cutter**
**uscg_reliance_class_cutter**
**uscg_medium_response_boat**
**uscg_short_range_prosecutor**
**uscg_long_range_interceptor**
**uscg_defender_class_response_boat**
**chevy_s10_drugcannon**

**Lot 3 – April 2014**

**speed_boat_donzi_38zr**
**narco_submarine**
**ladder_makeshift_22ft**
**drug_bail_single**
**drug_bail_2x3**
**cbp_interceptor_high_speed_boat**
**raft_makeshift_32ft**
**offshore_oil_platform**
**uscg_island_class_patrolboat**
**uscg_marine_class_patrolboat**
**uscg_keeper_class_bouytender**
**uscg_sentinel_class_cutter**
**snowcat_pisten_bully300**
**snowcat_br180**
**snowplow_sterling_acterra**

# Integration Plan

| AVCATT SE Core TDBs | |
|---|---|
| **Fielded** | **Future** |
| Afghan TDB (REL 12.00.xx) | *Afghan Box TDB (REL 14.00.00)* |
| Hawaii TDB (REL 12.00.xx) | *Hawaii v2 TDB (REL 14.00.00)* |
| Ft. Bliss TDB (REL 12.00.xx) | *ARCENT TDB (REL 14.00.00)* |
| Ft. Hood TDB (REL 12.00.xx) | *Ft. Bragg TDB (REL 14.01.00) (*HS)* |
| Ft. Campbell TDB (REL 12.00.xx) | *JBLM TDB (REL 15.00.00)* |
| Korea TDB (REL 12.01.xx) | *Germany TDB (REL 15.00.00)* |
| Ft. Drum TDB (REL 12.01.xx) | |
| Ft. Irwin (NTC) TDB (REL 13.00.00) | |
| Ft. Riley TDB (REL 13.00.00) | |
| Ft. Campbell TDB (REL 13.00.02) (*HS) | |
| Ft. Carson TDB (REL 13.00.02) (*HS) | |
| Ft. Stewart TDB (REL 13.00.02) (*HS) | |

*HS = Home Station initial fielding only. AVCATT-wide fielding completed at the next major release (e.g. XX.00.00)

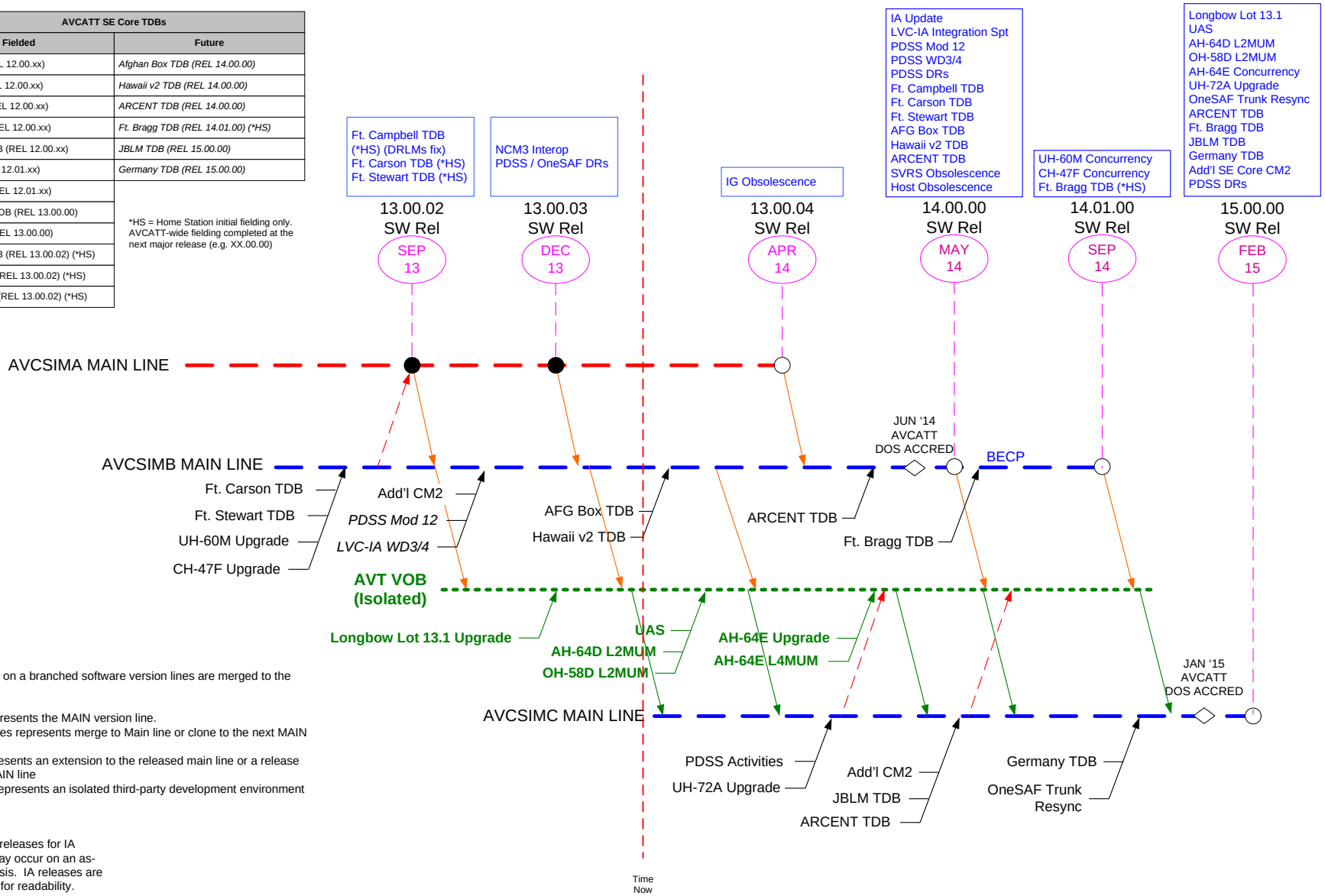


Note: All activity on a branched software version lines are merged to the MAIN Line.

A BLUE line represents the MAIN version line.
An ORANGE lines represents merge to Main line or clone to the next MAIN line.
A RED line represents an extension to the released main line or a release into the prior MAIN line
A GREEN line represents an isolated third-party development environment

**NOTE:**

1. Interim releases for IA updates may occur on an as-needed basis. IA releases are not shown for readability.