Live, Virtual, Constructive Integrating Architecture (LVC-IA) Industry Day

Richard Link
Assistant Project Manager LVC-IA
APM LVC-IA
PM ConSim – PEO STRI
8 December 2014

Agenda

Monday, 8 December 2014

0845 – 0900	Sign In
0900 – 0915	Welcome
0915 – 0930	Introductions/Ground Rules
0930 – 1000	LVC-IA Program and Contract Overview
1000 – 1100	Open Session Questions
1100 – 1115	Closing Remarks
1115 – 1230	Lunch
1300 – 1700	One-on-One Sessions (45 minute session, 15 minute break)

Tuesday, 9 December

0900 – 1400	One-on-One Sessions (45 minute session, 15 minute break)

Government Team

Program:

- Richard Link – APM
- Oanh Tran – Chief Engineer
- Susan Rodio – Lead Engineer
- Connie Perry – Project Director
- William Jones – Project Director
- MAJ Michael Riley - APM
- CPT Mitch Hockenbury – APM

Contracts/Other:

- Ray Fegal – Contracting Officer
- Jackie Bushway – Contract Specialist
- Tara Wagner – Deputy for Small Business Programs
- Mark Traylor – Logistics Management Specialist

Goals in the Acquisition Process

- Promote Government and Industry Interchanges
  - Listening to industry ideas
  - Informal and interactive discussions
  - Maximizing information availability to promote a common understanding about our requirement
  - Release of Draft Documents (Questions and Answers)
  - Determine small business participation
- Maintain procurement integrity and treat all offerors fairly
- Make a timely award

Ground Rules

- Primary Purpose - is to facilitate an exchange of information between the Government (PEO STRI) and Industry Partners regarding the LVC-IA program requirements and contracting approaches
- Positive Win-Win informational exchange
- Please silence your cell phones
- NO RECORDING ALLOWED
- No classified information will be shared during this session
- No information exchanged during this session or during the One-on-One sessions will be considered “Bid and Proposal Information” or “Source Selection Sensitive Information” unless otherwised specified
- Please, no side discussions during briefings
- Questions are welcome during or after each briefing
- Briefing slides will be posted to STRI BOP

LVC-IA Program Overview

- **Materiel Developer:** PEO STRI, PM ConSim
- **Combat Developer :** TRADOC Capability Manager (TCM) – Integrated Training Environment (ITE)
- LVC-IA is an ACAT III Program of Record
- Version 1.0
  - Facilitates Interoperability Between TADSS with MCS Core Systems:
    - Live Environment - Home Station Instrumentation Training System (HITS)
    - Virtual Environment - Close Combat Tactical Trainer (CCTT), Aviation Combined Arms Tactical Trainer (AVCATT) and
    - Constructive Environment - Joint Land Component Constructive Training Capability Entity Resolution Model (JLCCTC ERF)
- Version 2.0
  - Will incorporate additional systems, capabilities and emerging technologies including:
    - SIPRNET connection; Bi-Directional Mission Command (MC) Cross Domain Solution (CDS) rule sets
    - Distributed operations; Increased entity counts; Games for Training (GFT); and Dismounted Soldier Training System (DSTS)

Notional Effort for New Contract

- V3 and V4 Development
  - Joint Development Integration Facility(JDIF): Government Facility
    - Accredited for SECRET Operation & Storage
    - 3rd Floor at 12000 Research Parkway, Orlando, FL 32826
    - ~ 3400 Square Feet
  - 2 year Development / Integration & Test Cycle, Each Version
  - Government Acceptance Test (GAT) and First User Assessment (FUA), Each Version
- Post Deployment Software Support
  - **PDSS Facility: Contractor Facility**
    - **Accredited for SECRET Operation & Storage**
  - Site Support
  - Spares
  - Version Upgrades
  - Help Desk
- Tech Refresh
  - ~ 3 Sites per Year for a Total of 15 Sites
- Transition of Government Furnished Equipment (GFE)

LVC-IA Acquisition Overview

Acquisition Process Overview (Draft)

- Market Research Phase (1st Quarter FY15)
  - Industry Conferences & Interchanges
  - Sources Sought Notices (SSN)
- Acquisition Strategy Phase (2nd Quarter FY15)
  - Draft Solicitation
  - JDIF Site Visit and Walk Through
  - Gain Industry Feedback
- Solicitation Phase (3rd Quarter FY15)
  - Approximately 30 Days
- Contract Award (3rd Quarter FY16)

Acquisition Strategy Considerations

BLUF: Currently assessing all options to determine most appropriate strategy. Upon finalization of the Acquisition Strategy, must obtain approval.

- Contract Vehicle:
  - STOC II / Lot II Contract
  - Competitive, Small Business Contract (Outside of STOC)
  - STOC II / Lot I Contract
- Contract Type [examples of effort for respective contract type]:
  - Firm Fixed Price (FFP) [Technical Data Package]
  - Cost No Fee [Materials, Travel]
  - Cost Plus Fixed Fee (CPFF) [Development, Integration & Test, PDSS]
- Period of Performance:
  - Anticipated Six Years (2 Base Years with 4 One Year Options)
- Award Basis: Best Value / Trade-Off Basis
- Contract will have a requirement to acquire Information Technology (IT) hardware through CHESS

JDIF Facility Layout

12000 Research Parkway, Suite 300 Orlando, FL 32826

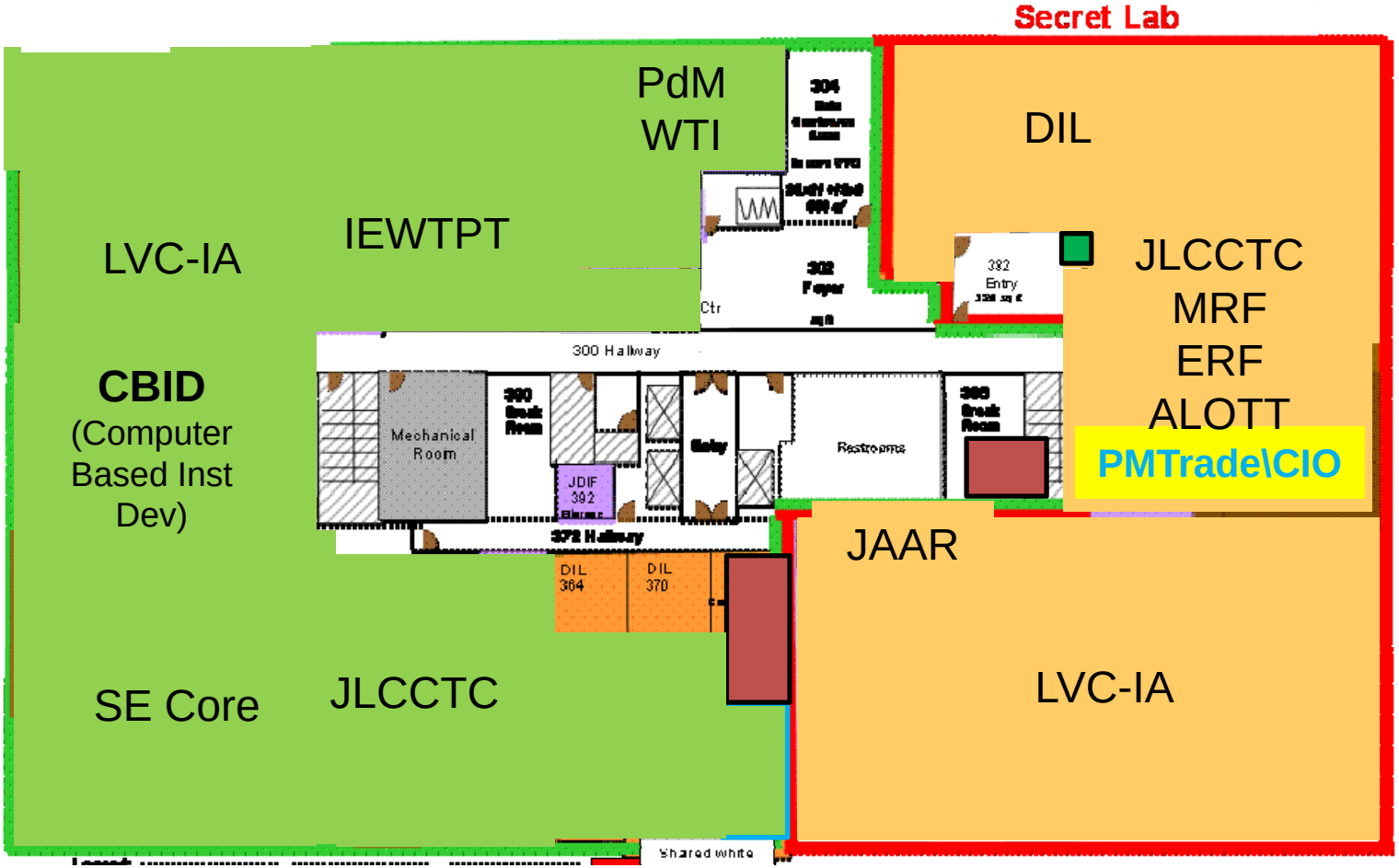

Limited Access Area ***Classified lab*** ***Storage***

LVC-IA Fielding Plan

- Ft. Hood, TX
- Ft. Bliss, TX
- Ft. Campbell, KY
- Ft. Drum, NY
- Korea
- Ft. Stewart, GA
- Ft. Riley, KS
- Ft. Carson, CO
- Schofield Barracks, HI
- Ft. Bragg, NC*
- Joint Base Lewis-McCord, WA*
- USAREUR*
- USARAK*
- Ft. Benning, GA (COE)*
- Ft. Polk*

Indicates systems not yet fielded

Notional LVC-IA Schedule

	FY14	FY15	FY16	FY17	FY18	FY19	FY20	FY21	FY22
	1 | 2 | 3 | 4	1 | 2 | 3 | 4	1 | 2 | 3 | 4	1 | 2 | 3 | 4	1 | 2 | 3 | 4	1 | 2 | 3 | 4	1 | 2 | 3 | 4	1 | 2 | 3 | 4	1 | 2 | 3 | 4
Milestones									
Initial Operational Capability (IOC)									
Full Operational Capability (FOC)									
Requirements Change Board (RCB)									
Development									
Version 2	V2.0								
Version 3				V3.0					
Version 4					V4.0				
Initial Fielding (Version 1.0 => 1.x)/Tech Refresh									
Ft. Hood, TX									
Ft. Bliss, TX									
Ft. Campbell, KY									
Ft. Drum, NY									
Korea									
Ft Stewart, GA									
Ft Riley, KS									
Ft Carson, CO									
Schofield Barracks, HI									
Ft Bragg, NC									
JBLM, WA									
USAREUR									
USARAK									
Center of Excellence (Ft Benning, GA)									
Ft Polk, LA									
Post Deployment Software Support (PDSS)									
Version 1.0	v1.x								
Version 1.0 to 2.0			v1.x => v2.0						
Version 2.0 to Version 3.0 to Version 4.0				v2.x => v4.x					
Upgrades (Version > Version)									
Version 1.x to Version 2.x (New Contract)				V1.x -> V2.x (15 sites)					
Version 2.x to Version 3.x (New Contract)						V2.x -> V3.x (15 sites)			
Version 3.x to Version 4.x (New Contract)								V3.x -> V4.x (15 sites)	

Computer Software Configuration Item (CSCI)/Hardware Configuration Item (HWCI)

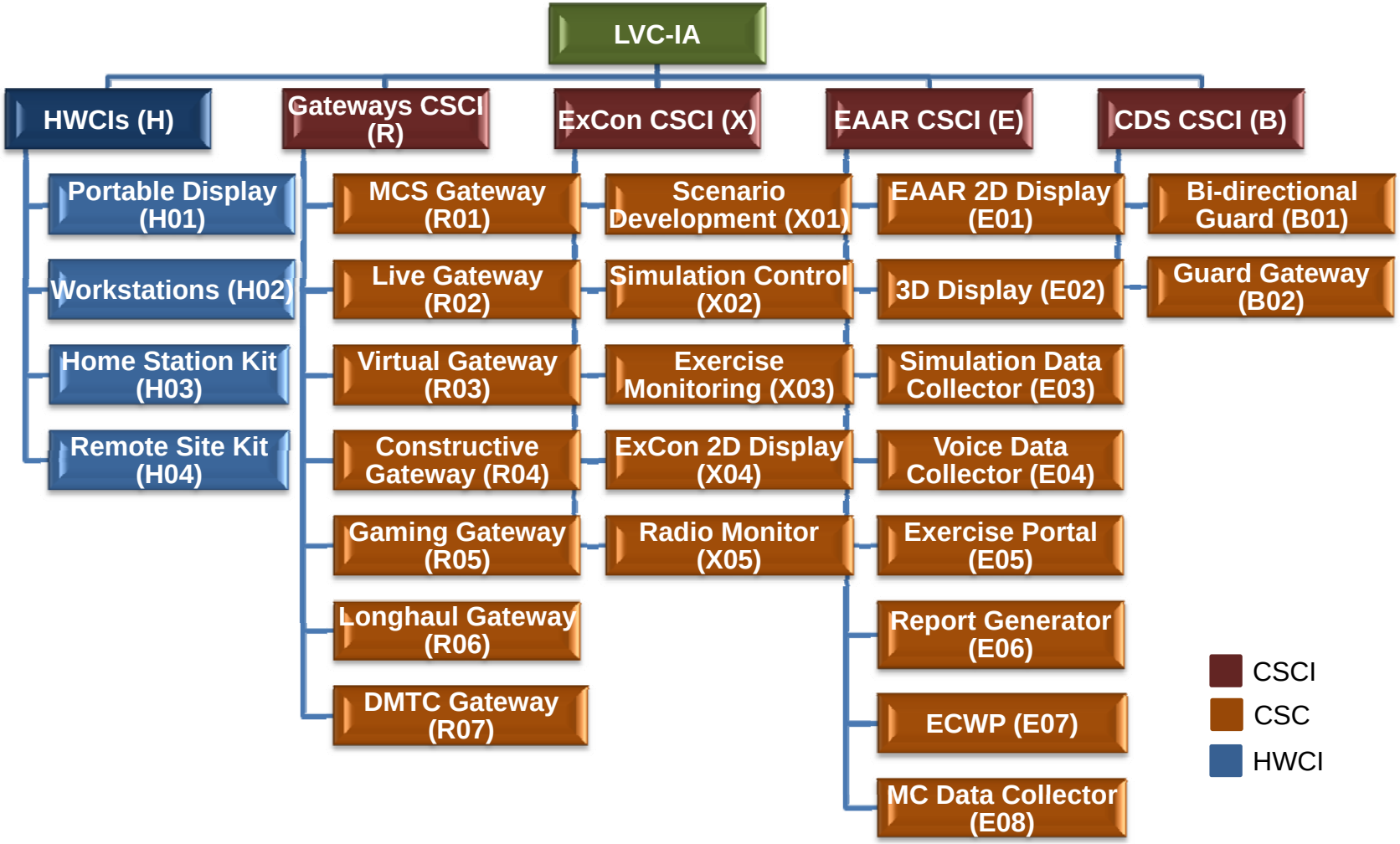

V2 Hardware Overview

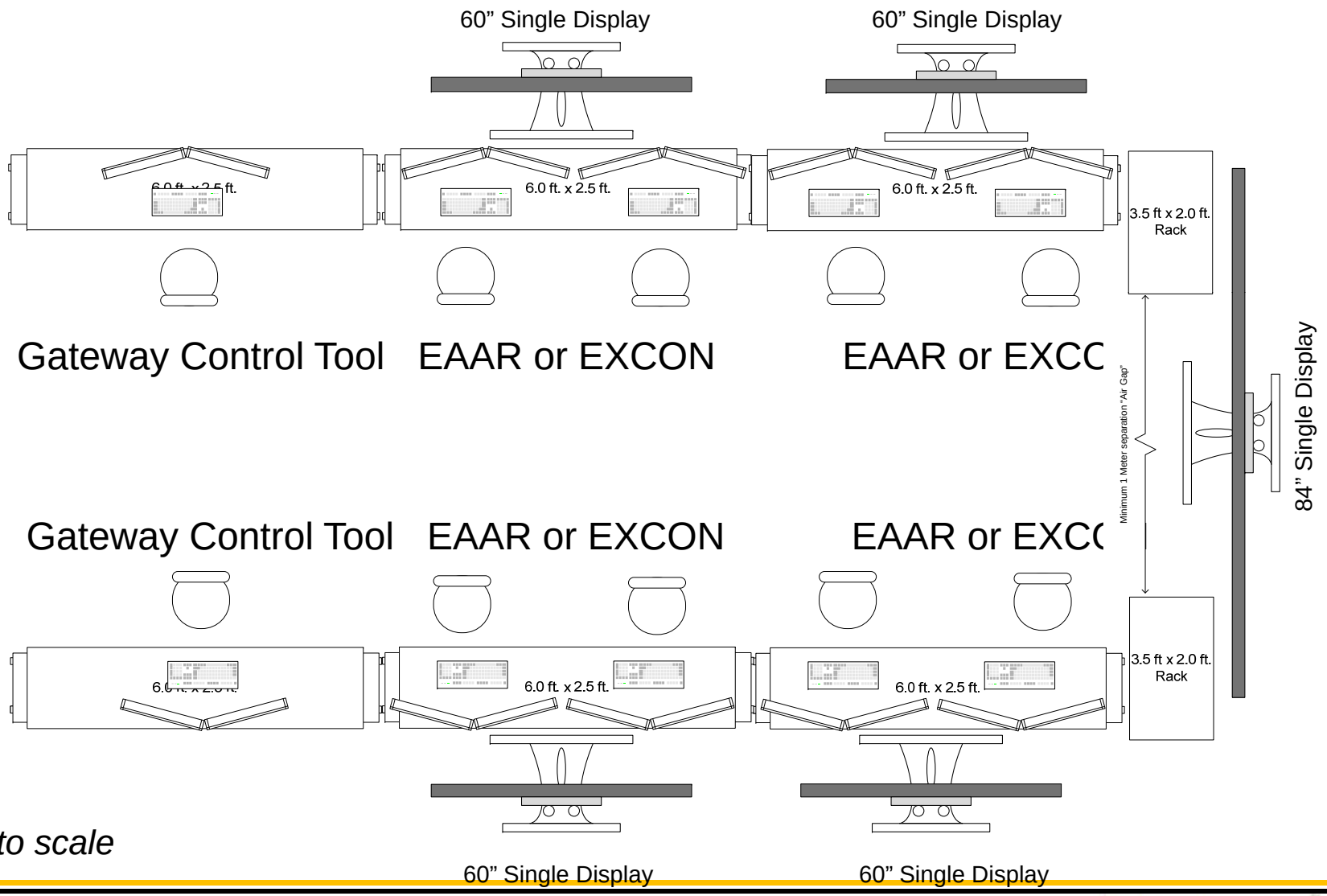

**Not to scale*

V2 Hardware Overview

Portable Displays – H01

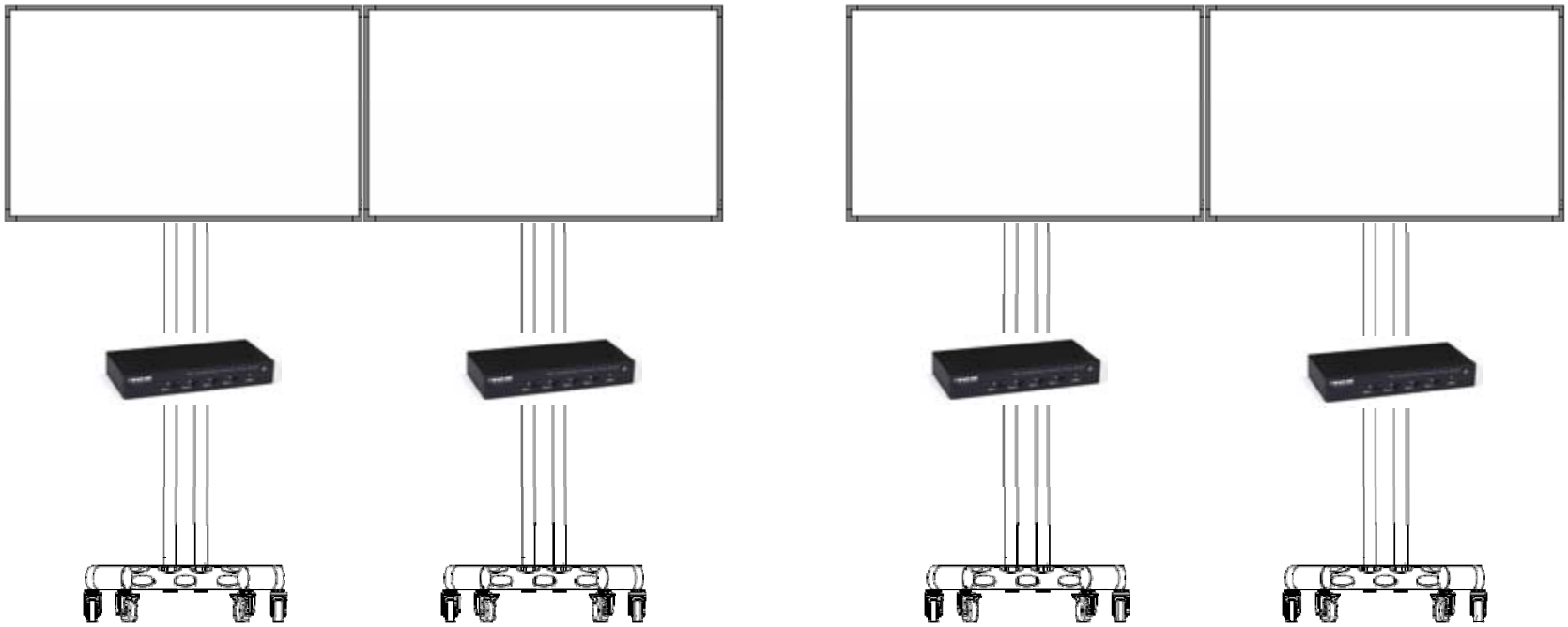

V2 Hardware Overview

Portable Displays – H01

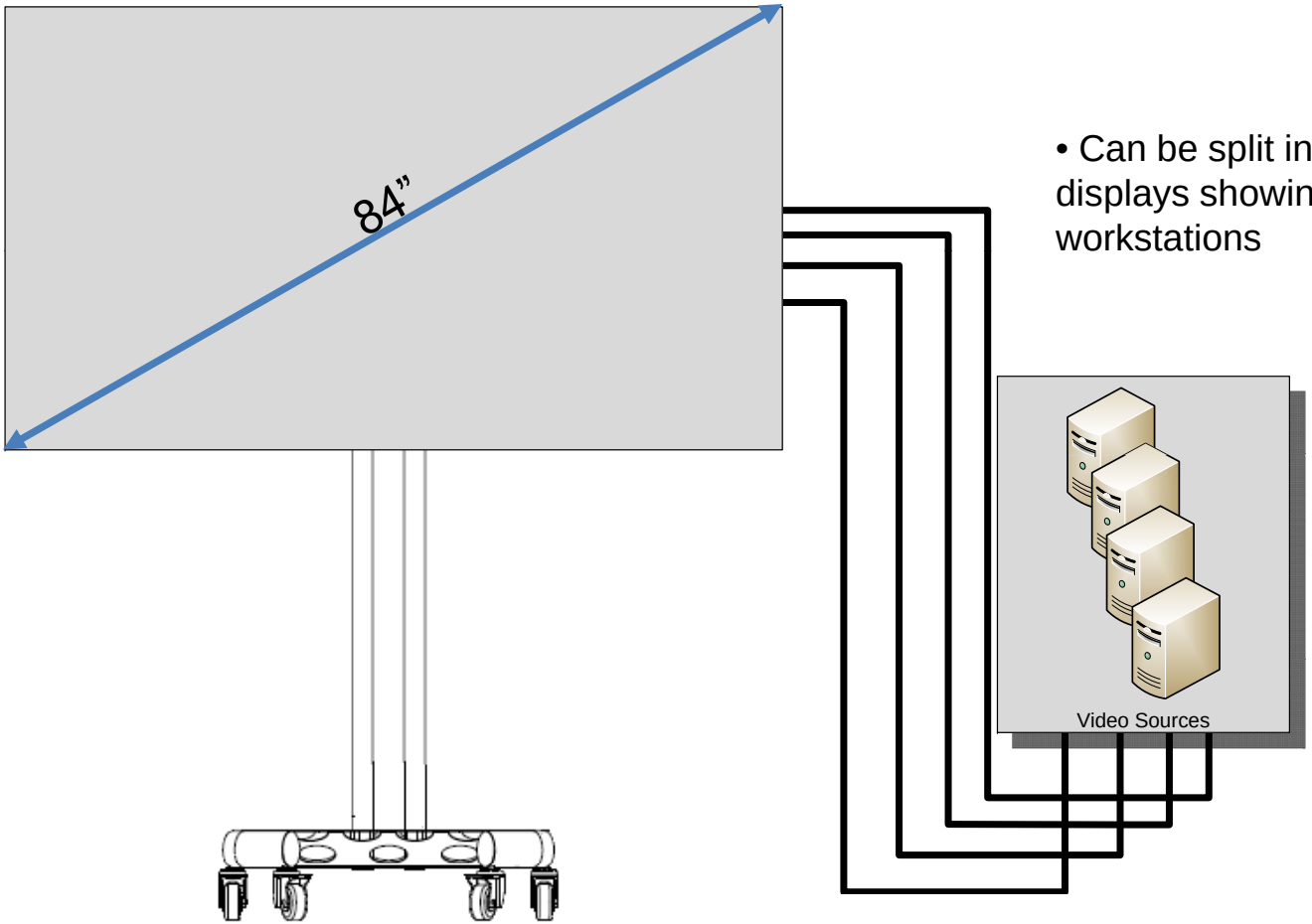

- Can be split into 4x1080p displays showing 4 workstations

V2 Hardware Overview

Workstations – H02

V2 Hardware Overview

Home Station Kit – H03

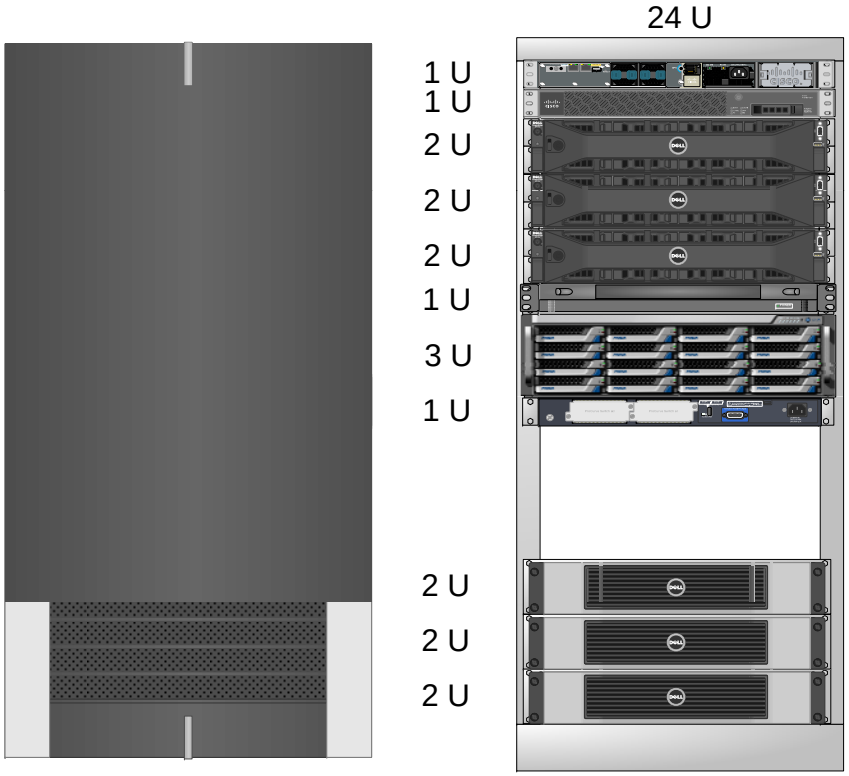

Unclassified Server Rack

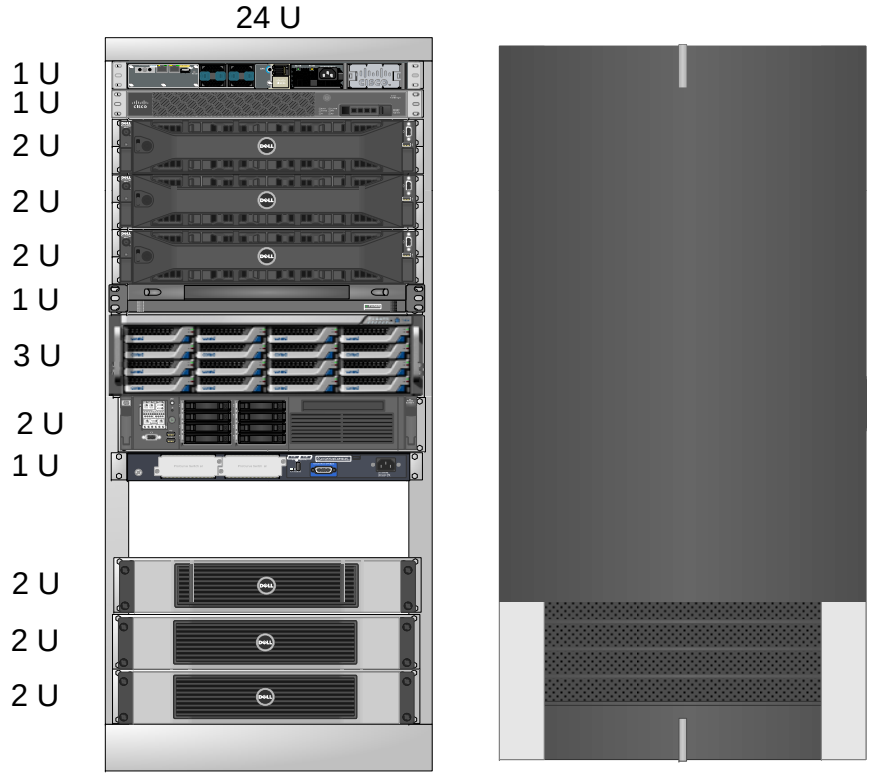

Classified Server Rack

V2 Hardware Overview

Remote Site Kit – H04

7 U

2 U

2 U

2 U

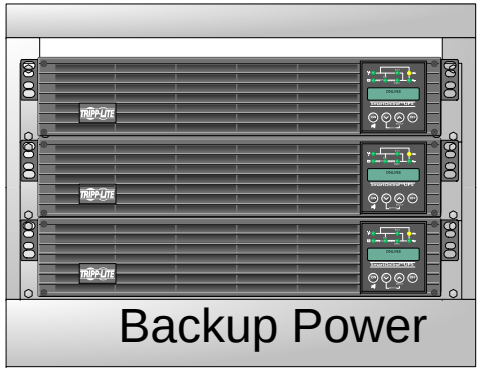

Backup Power

15 U

1 U
1 U
1 U
2 U
2 U
1 U
1 U
3 U
1 U
1 U
1 U

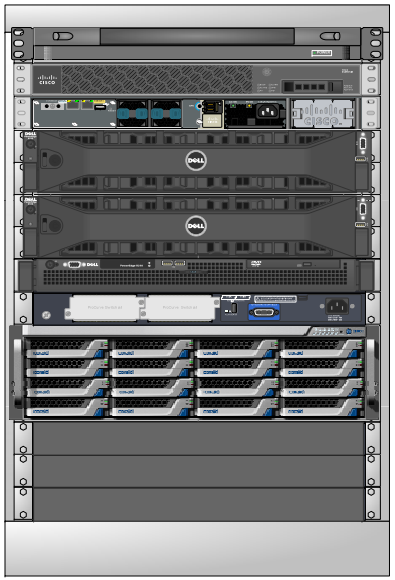

Servers

Ruggedized Rack

Ruggedized Rack

Common Components

- Virtual Servers
- SAN
- Uninterruptable Power Supply
- Backbone Network Switch
- Storage Network Switch
- Workstation Network Switch (Home Station Only)
- Specified Robustness (Home Station Only)
- Keyboard, Video, Mouse (KVM)

LOGICAL NETWORK DIAGRAM

v2.0 Architecture – Home Station

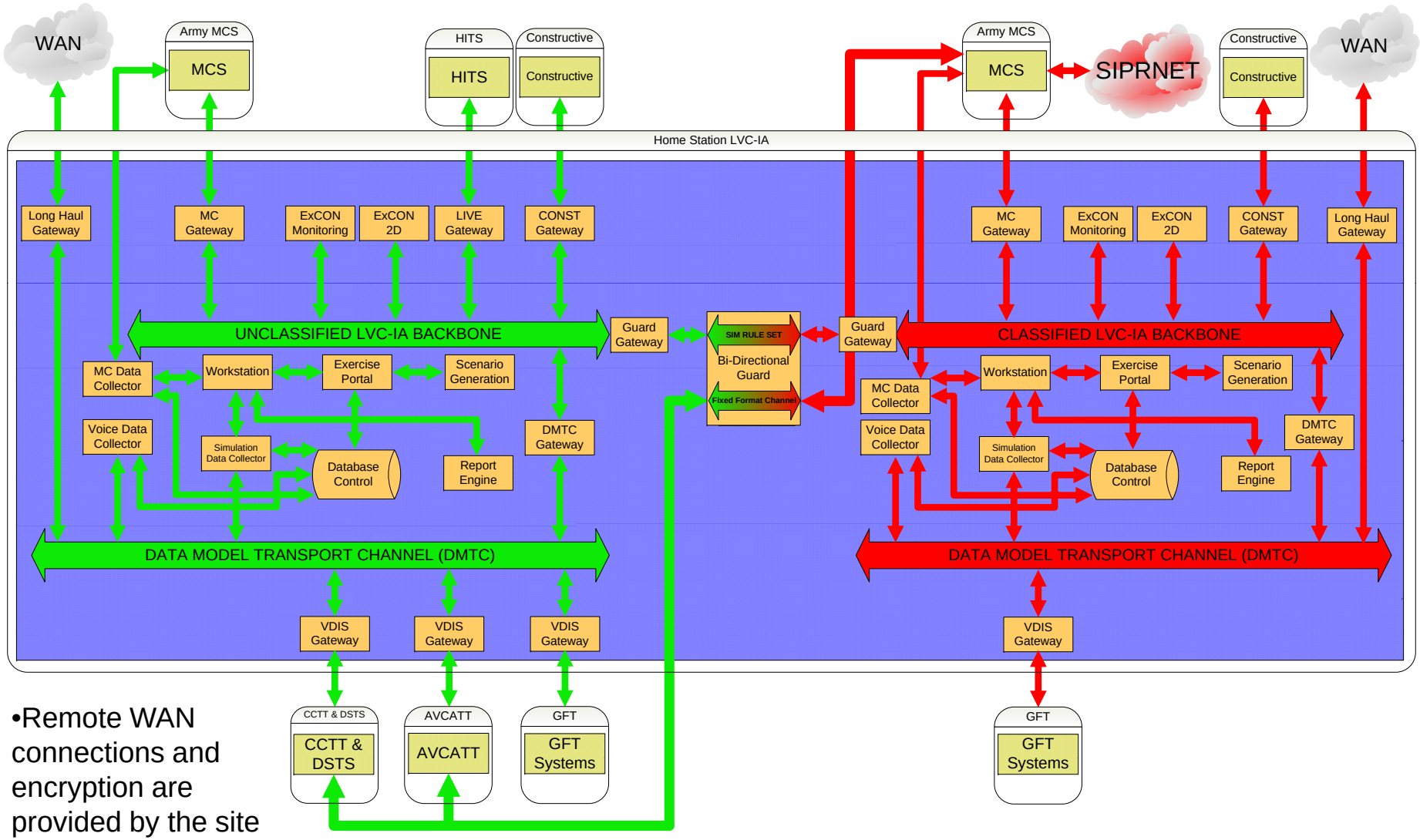

•Remote WAN connections and encryption are provided by the site

v2.0 Architecture – Remote

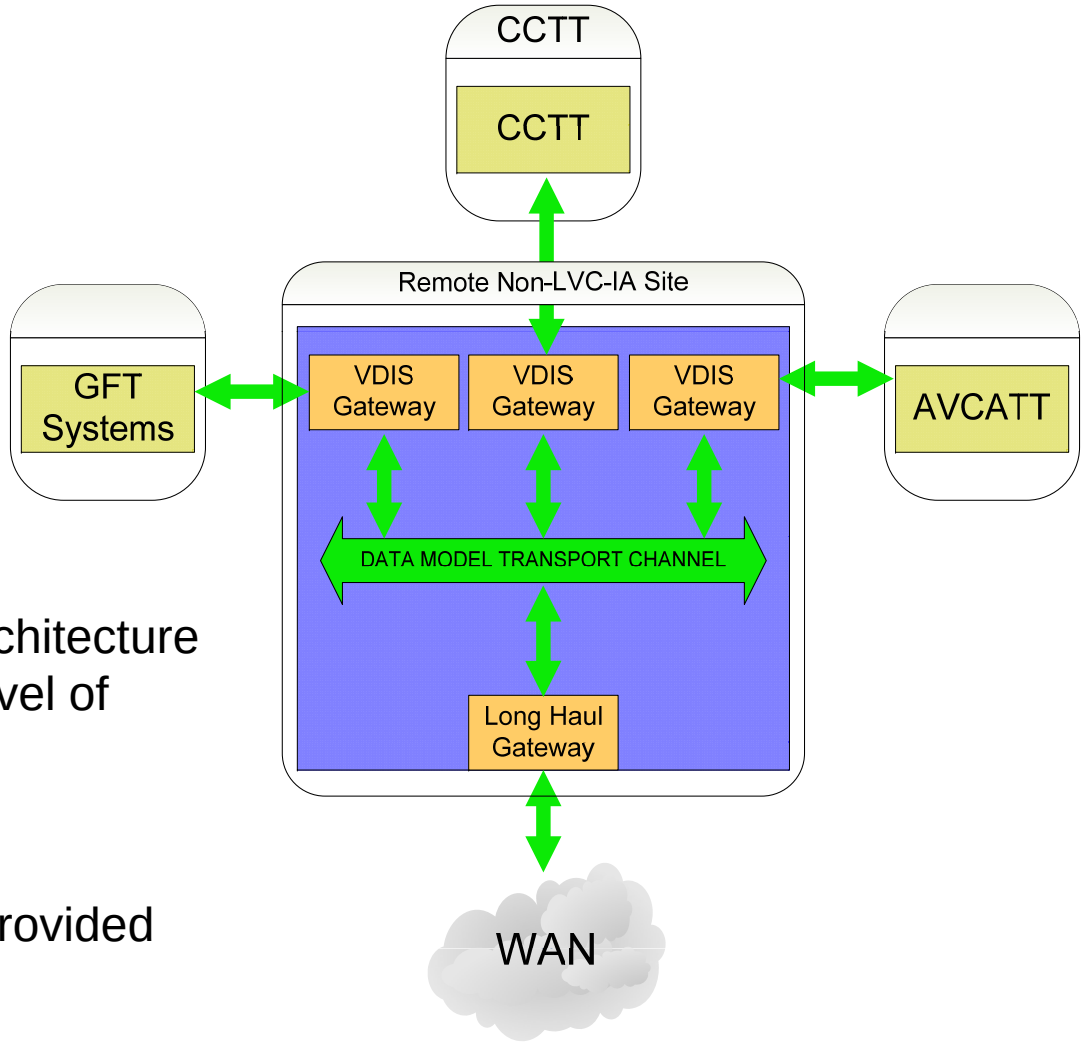

- This remote architecture supports both level of classification
- Remote WAN connections and encryption are provided by the site

LVC-IA Industry Day

- Questions?
  - Ray Fegal – raymond.j.fegal2.civ@mail.mil, P: 407-208-5044
  - Jackie Bushway – jacqueline.e.bushway.civ@mail.mil, P:407-384-3555
  - Rich Link – richard.a.link10.civ@mail.mil, P:407-384-5214

- Information provided by industry, unless marked proprietary will be considered releasable.

- Upon draft RFP release, follow-up questions must be presented to Contracts only.

QUESTIONS?

BACKUP

LVC-IA Help Desk

- Elements of Help Desk Support
  - Telephonic
    - Answered 8:00 A.M – 5:00 P.M. EST
    - After hours email generated to help desk team with .wav attachment
  - Email
    - Sent to help desk team
  - Website
    - Issue Management
    - Knowledge Center for LVC-IA

Notional Help Desk Ticket Flow

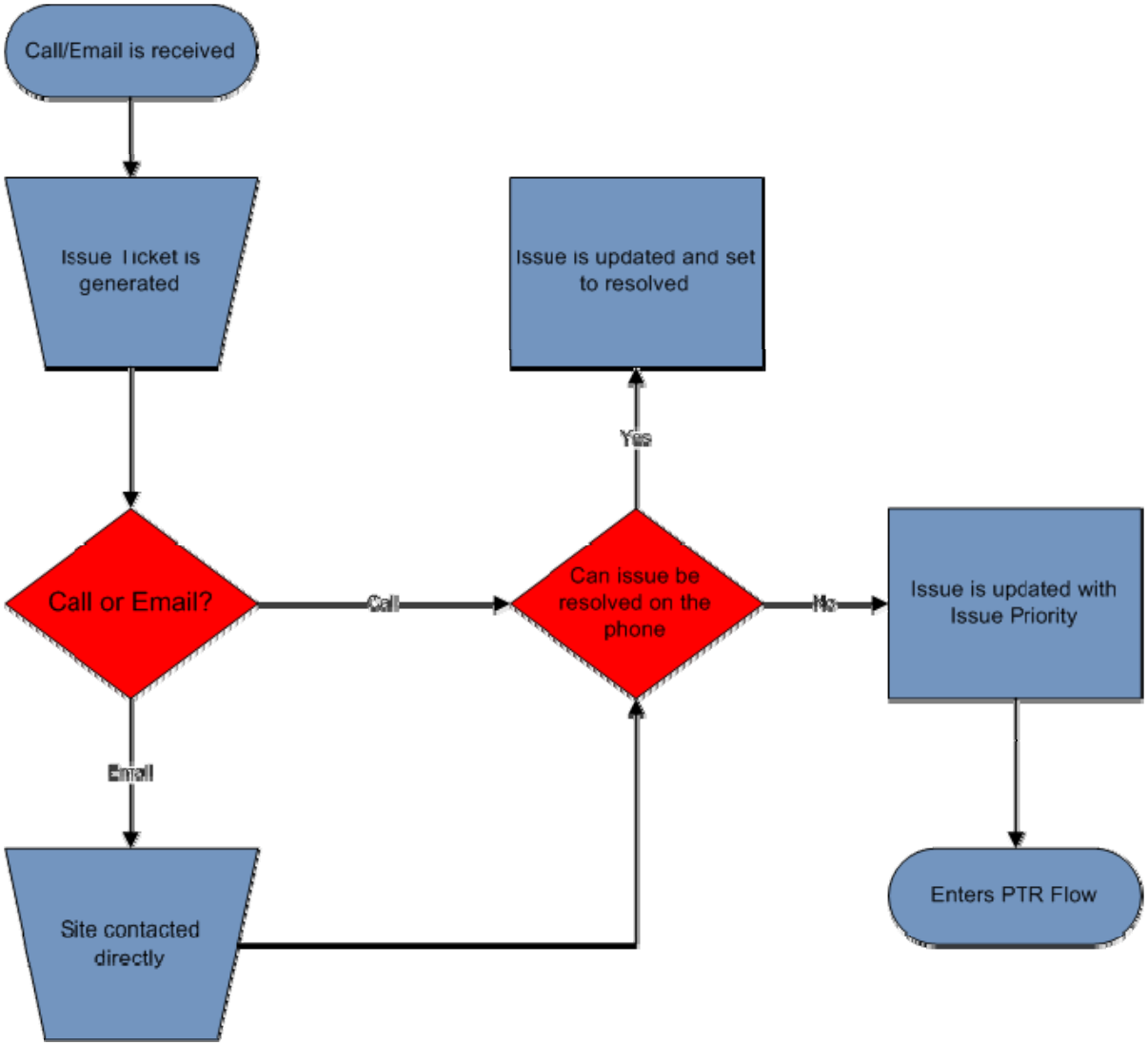

Help Desk Response Times

Priority	Definition	Notional Response Times
Urgent	LVC-IA Site is experiencing an outage and cannot access primary application. Problem has no work-around solution available.	Site will be contacted within 12 Hours
High	Site cannot access a non-critical business. Problem has short-term work-around solution available.	Site will be contacted within 24 hours
Medium	Site cannot access a non-critical application, or a user has an inquiry: question on how things work, service, request, etc. Problem has long-term work-around solution available.	Site will be contacted within 24 hours
Low	Request for replacing a hardware device or installing software application for user. Includes replacement OVA media, Portal user creations, Portal project requests etc…	Site will be contacted within 48 hours

Unclassified Network Architecture

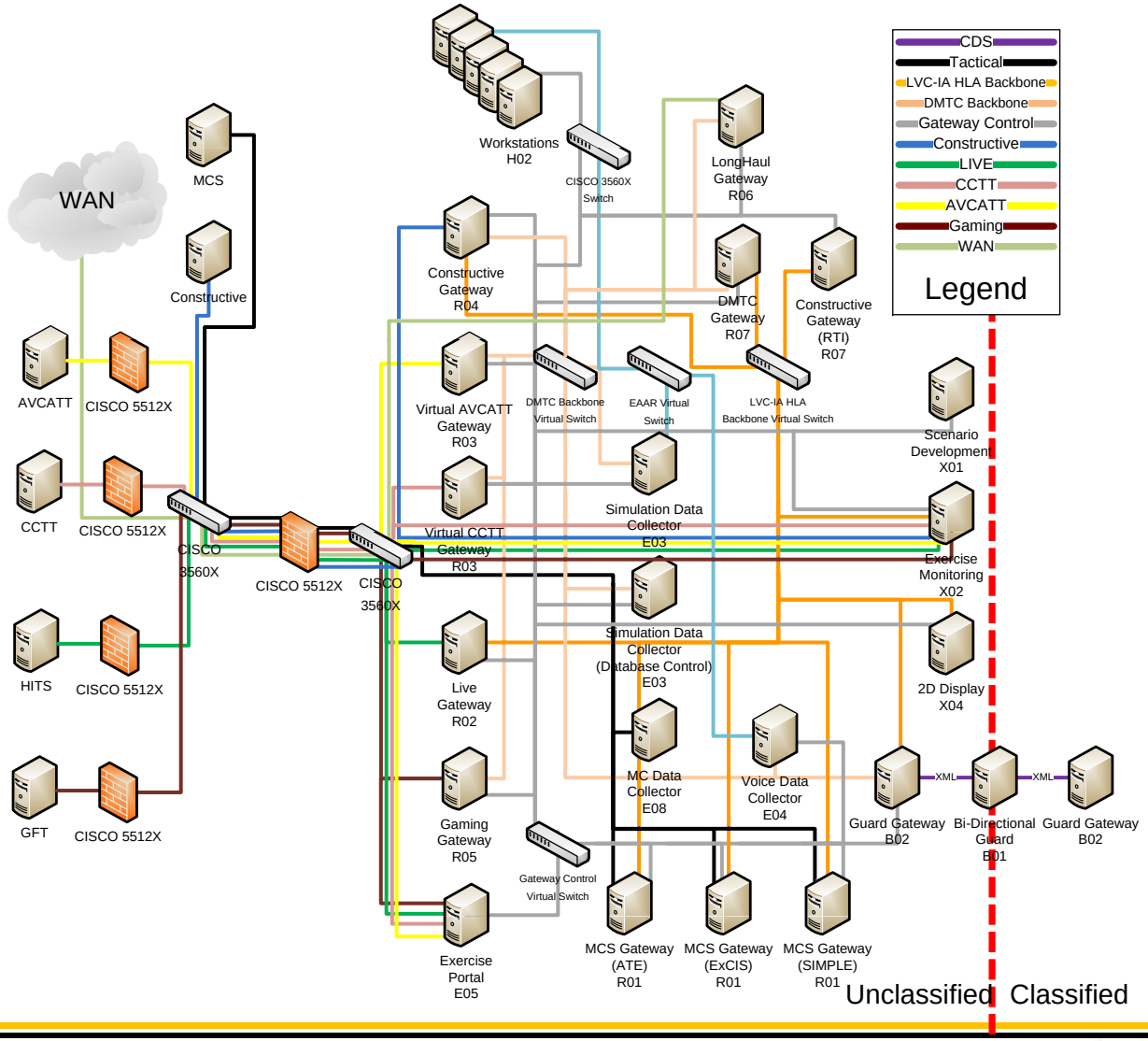

Classified Network Architecture

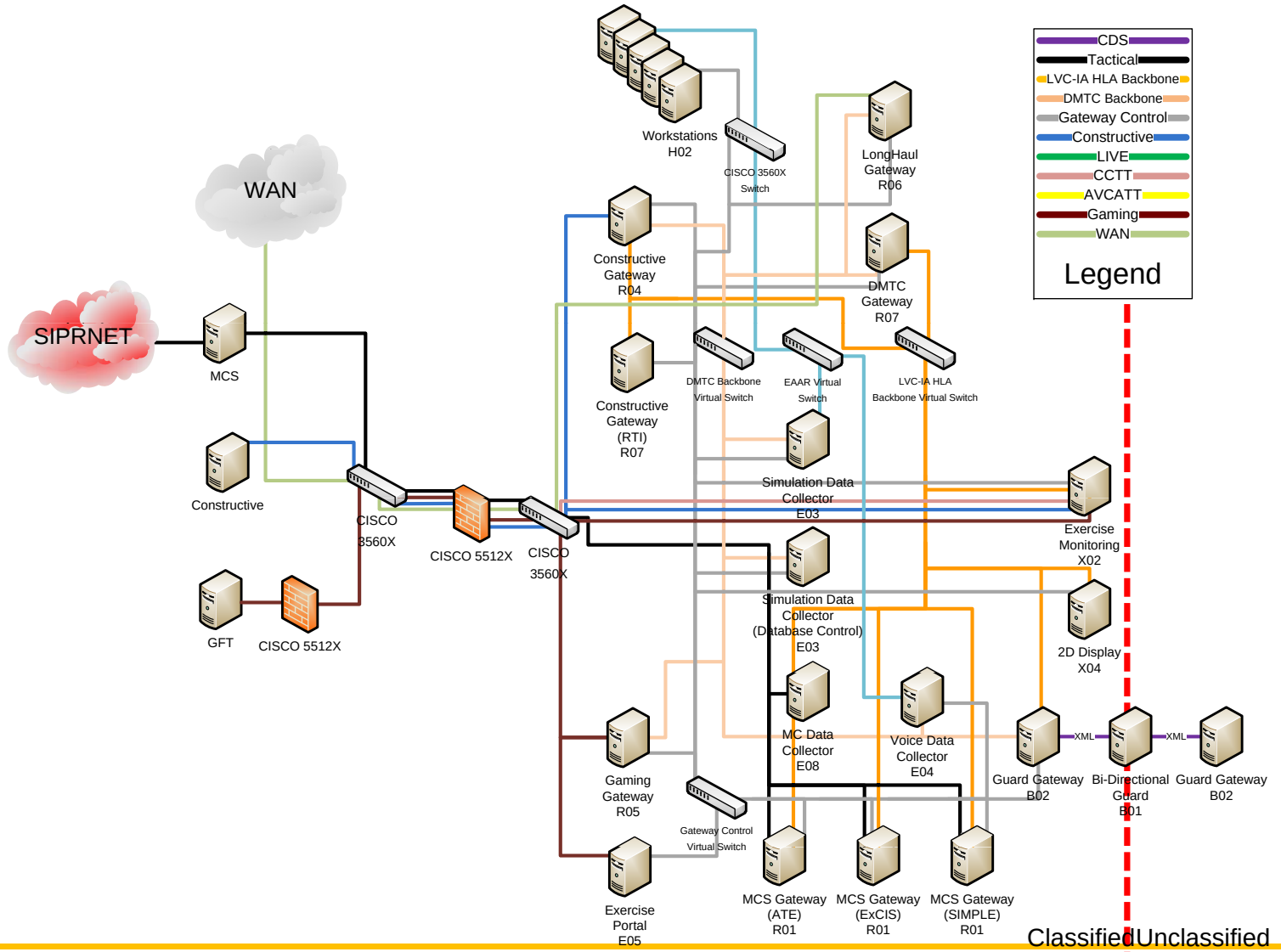

V2.0 Data Flow

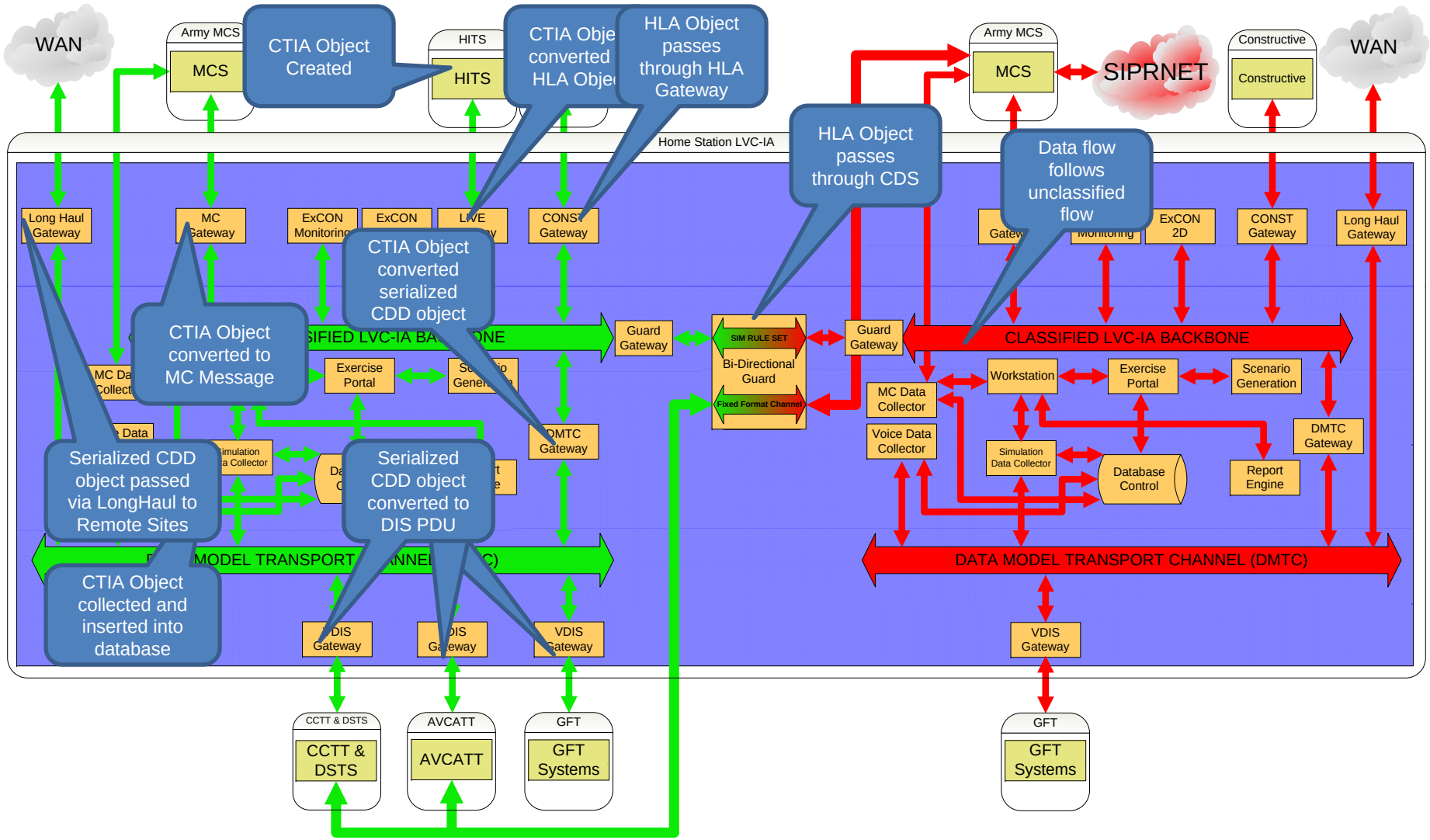

v2.0 Architecture – Remote Data Flow

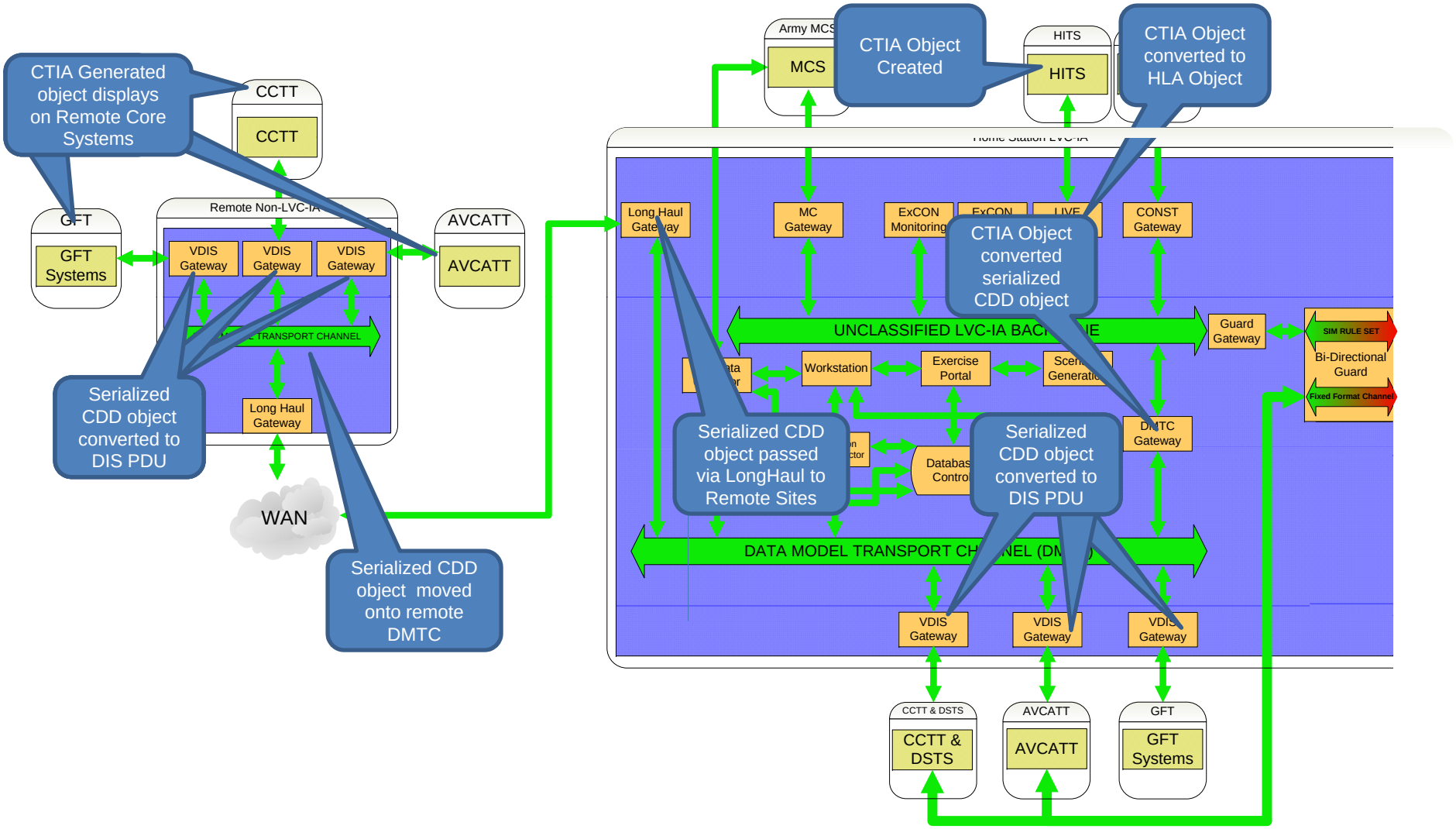

v2.0 CSC to HWCI Mapping

CSC	Workstations (H02)	Home Station Kit (H03)	Remote Site Kit (H04)
MCS Gateway (R01)		X	
Live Gateway (R02)		X	
Virtual Gateway (R03)		X	X
Constructive Gateway (R04)		X	
Gaming Gateway (R05)		X	X
Longhaul Gateway (R06)		X	X
DMTC Gateway (R07)		X	
Scenario Development (X01)		X	
Simulation Control (X02)		X	
Exercise Monitoring (X03)		X	
2D Display (X04)	X		
Radio Monitor (X05)	X		
2D Display (E01)	X		
3D Display (E02)	X		
Simulation Data Collector (E03)		X	
Voice Data Collector (E04)		X	
Exercise Portal (E05)		X	
Report Generator (E06)		X	
ECWP (E07)	X		
MC Data Collector (E08)		X	
Bi-Directional Guard (B01)		X	
Guard Gateway (B02)		X	

Note – H01 Portable Displays does not contain any CSCs

Virtual Server Architecture

- VMWare vCenter
  - VMware application that controls ESXi Servers
- VMware ESXi
  - Server Operating System that hosts Virtual Machines (VMs)
- Virtual Machine (VM)
  - Guest machine running Windows or Linux operating system
- VMware vSphere Client
  - VMware client software that runs on workstations to allow access to vCenter server and VMs

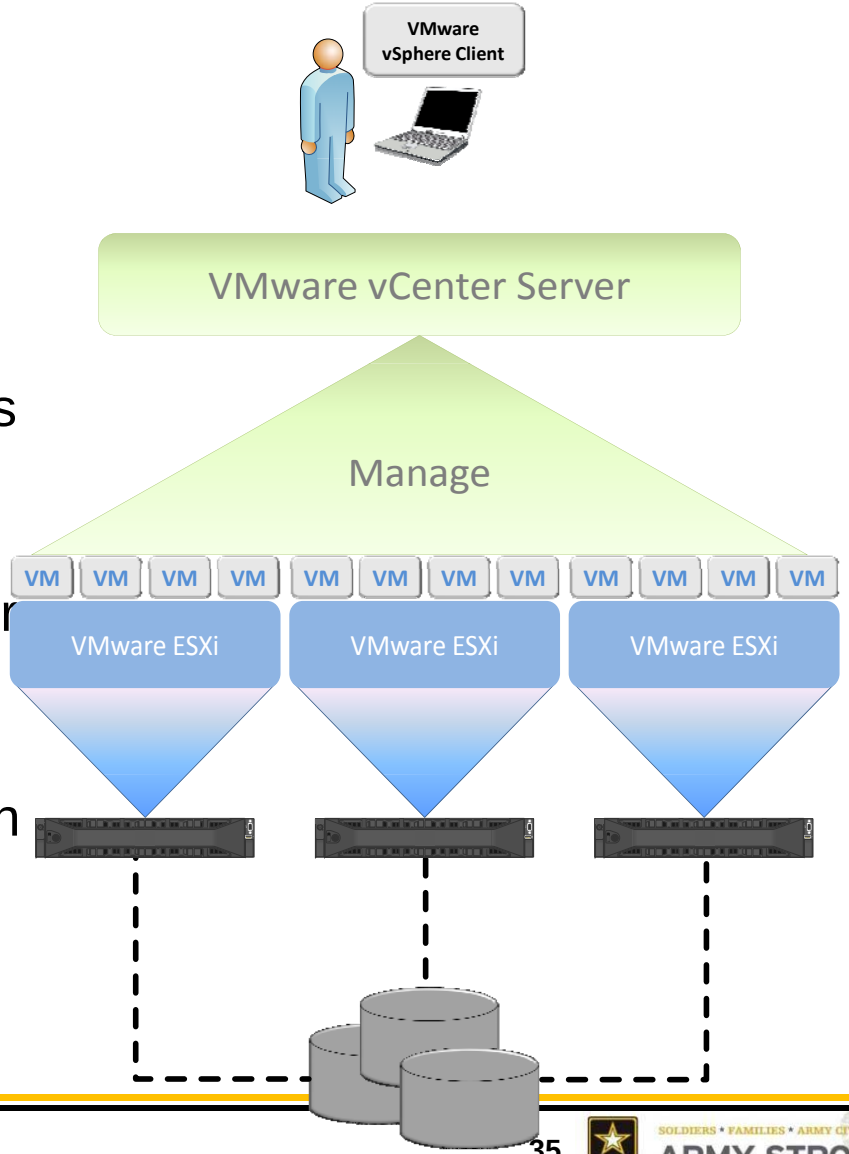

Virtual Server Storage Architecture

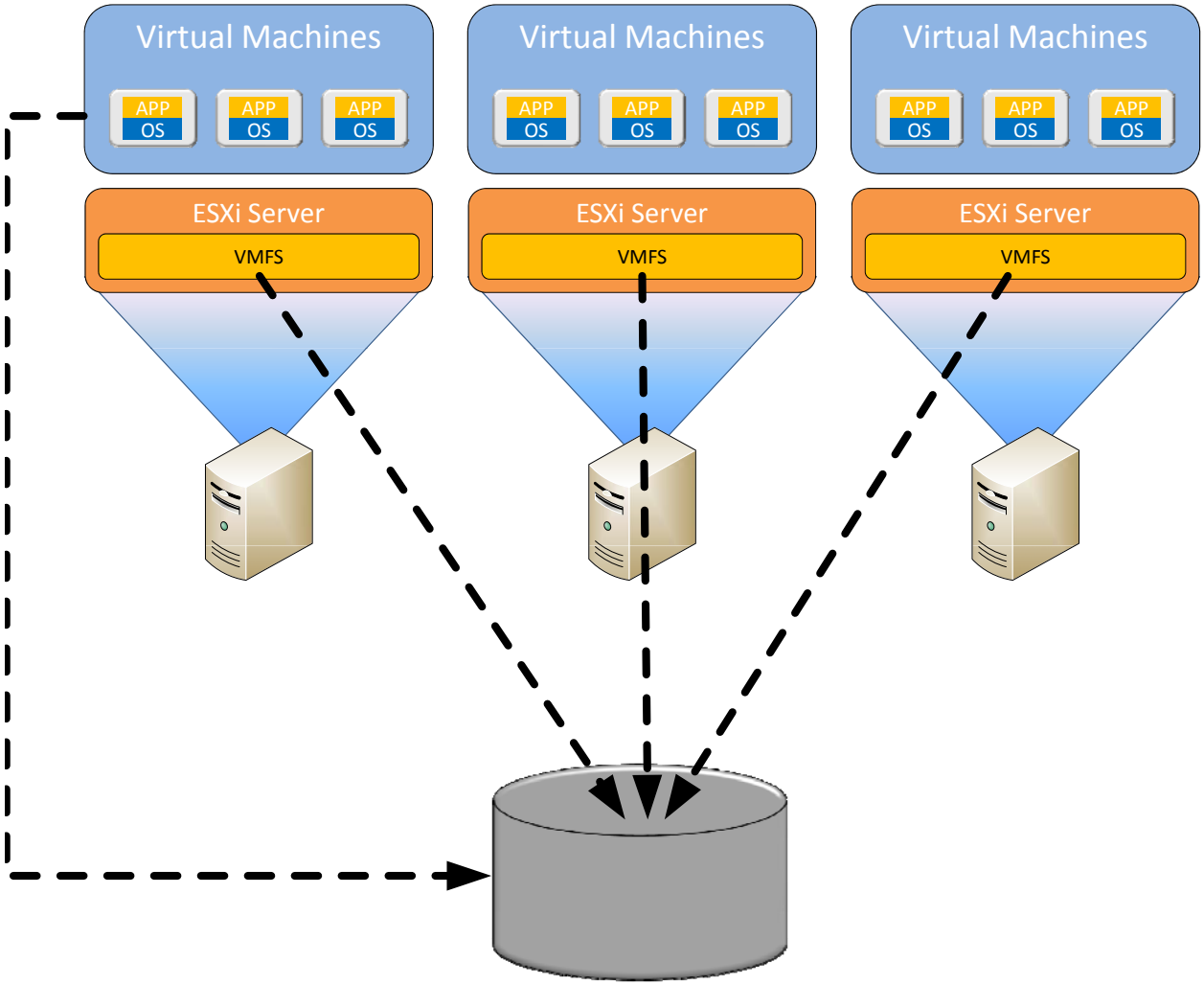

Shared Storage
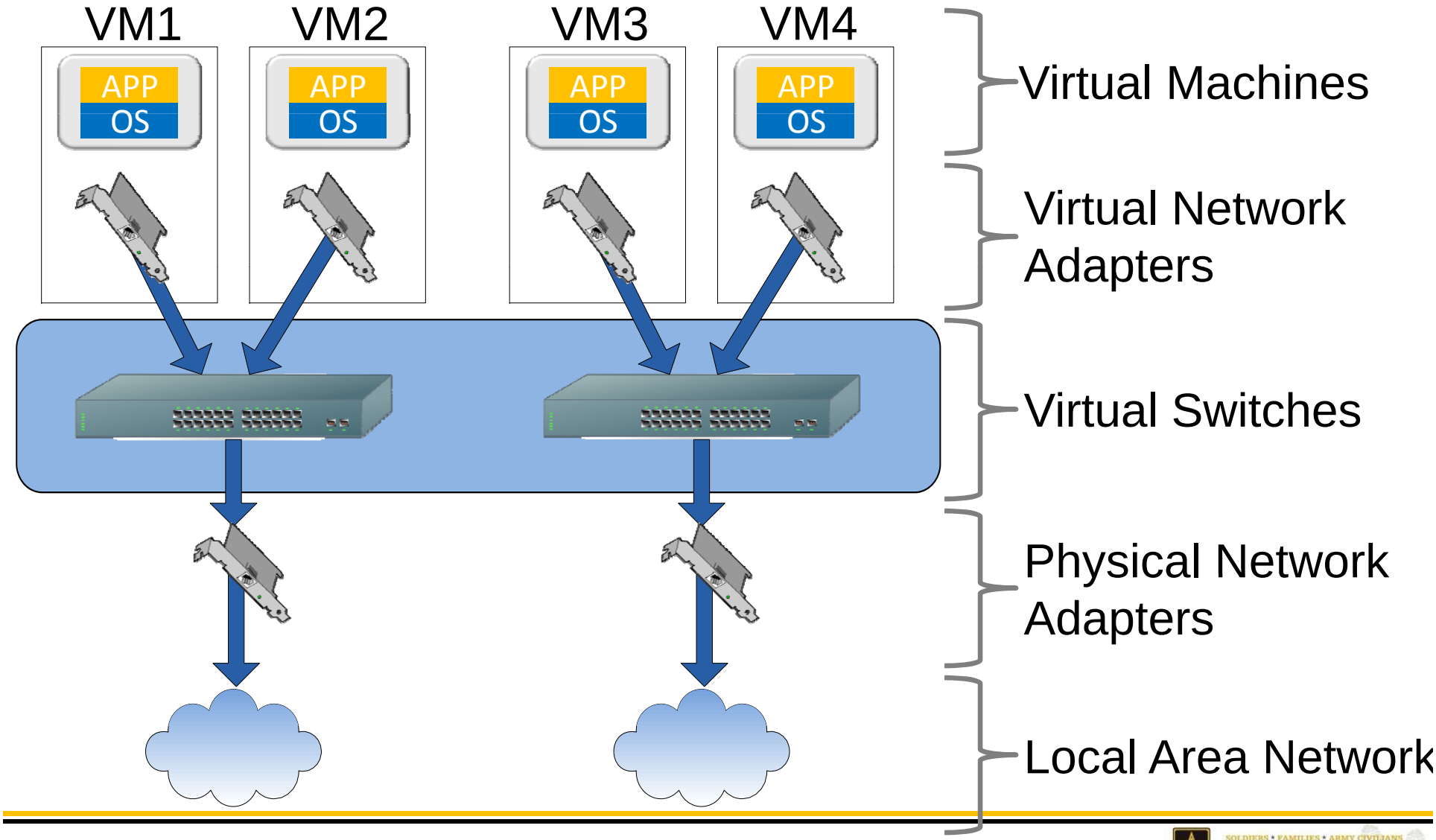
Virtual Server Networking Architecture