Live Training Transformation (LT2)

LT2
Tatical Engagement Simulation System (TESS)
Component Architecture
Foundation Overview

Document Number LT2 TESS CA-001
VERSION 0.1

31 December 2014

Distribution A: Approved for public release, distribution is unlimited.

CHANGE HISTORY

Version	Change Summary	Date
0.1		

DRAFT

CONTENTS

1.0 SCOPE 4

1.1 IDENTIFICATION 4

1.2 LT2 TESS COMPONENT ARCHITECTURE OVERVIEW 4

1.3 LT2 TESS COMPONENT ARCHITECTURE FUNCTIONAL CONFIGURATION DIAGRAMS 6

1.3.1 Base Configuration 7
1.3.2 Turret Mounted Configuration 7
1.3.3 Legacy Hub Configuration 8

1.4 LT2 TESS LTEC OVERVIEW 9

1.5 LT2 TESS LPAN OVERVIEW 9

1.5.1 LPAN Wireless Network 10
1.5.2 LPAN Wired Network 11

1.6 LT2 TESS COMMON POWER SUPPLY (CPS) OVERVIEW 11

1.7 HCA MASTER LIST 12

1.8 SCA MASTER LIST 12

1.9 COMPONENT ARCHITECTURE MODES OF FUNCTIONAL OPERATION OVERVIEW 13

1.10 PURE FLEET – USER INTERFACES: PHYSICAL AND OPERATIONAL CONSISTENCY 13

1.11 LOGISTICS AND SUSTAINABILITY 14

DRAFT

1.0 Scope

1.1 Identification

This document describes the overarching LT2 TESS Component Architecture (CA) vision. It is imperative the functional architecture and vision presented in this document be adhered to maintaining PM TRADE intent and vision.

The LT2 TESS CA segregates key functional devices used in the PM TRADE live training environment (Force-on-Force/Force-on-Target) into major individual components and related software that communicate via a set of wire and wireless network standards. Each of the individual components, networks and core software elements of the LT2 TESS CA are defined and controlled by individual LT2 TESS Hardware Component Agreements (HCA) and System Composition Agreements (SCA).

1.2 LT2 TESS Component Architecture Overview

TESS acquisition strategies will shift from acquiring contractor specific configurations to scalable component based configurations that can be used across a variety of platforms, soldiers, and infrastructure. The same baseline configuration of components will be used for both simple and complex weapon systems. Additional components will be added to the network to instrument more complex weapon platforms. The CA adopted the same major components used across industry over the last 20 years as the foundation. The proprietary intra-component network communications are replaced with a common networking standard allowing components, independent of manufacturer, to join and support the weapons system TESS instrumentation network.

The CA allows industry to retain innovation for achieving individual component functionality while enabling interoperability within the component network. Each component agreement defines the functional capability, interfaces, and messaging requirements. One component, the Master Controller is unique in that it hosts the government owned and controlled battle damage assessment and component interface and networking services software. Collectively, the government owned and managed interfaces and software is aggregated under the Live Personal Area Network (LPAN) and the Live Training Engagement Composition (LTEC), respectively.

The CA approach will transform PM TRADE's ability to provide new levels of service, technology insertion, and reduce support and sustaiment costs for U.S. Army. Some of the future tangible benefits enable:

a. Gradual migration to embed training component functionality and hybrid appended/embedded configuration in weapon platforms.

b. Remote component configuration management and software support.

c. Proactive maintenance based on component BIT pre, post and during exercises.

d. Trend analysis and component predictive failure analysis based on component specific unique data, manufacturer, and serial numbers.

DRAFT

e. Component utilization management and tracking by site.

f. Technology insertion and future program product integration.

g. Expanded soldier training benefits to include real time coaching through correlating digital tactical communications and messaging with soldier vehicle command inputs (Training Data Fusion).

h. Utilizing shared weapons system resources to improve training effectiveness and simplify installation (e.g. slip ring data and power line allocation, Victory data bus, Multi-Function Vehicle Port).

i. Componentized acquisitions / Simplified acquisitions / GSA for certified components.

j. Active inventory control.

k. Component interchangeability independent of manufacturer and weapon platform.

l. Ability to perform remote automated configuration and sustainment management.

m. Opportunity to reduce total cost of ownership and Life-Cycle costs.

n. Enhance competition through published HCA, SCA and interface standards.

o. Simplify and standardize user instrumentation set-up and configuration (Common look and feel for Soldiers “Pure-Fleet”).

p. Enable seamless hardware and software based technology insertion.

q. Provides a path to introduce Virtual & Constructive components into the live environment (ITE/STE).

Figure 1 describes the initial CA comprised of compoents and their interfaces. Over time this master view will evolve to include new components fed by technology insertion and embedded training applications, as well as new acquisition programs like the Army Tatical Engagement Simulation System (A-TESS) and Training Instrumentation Systems (T-IS).

DRAFT

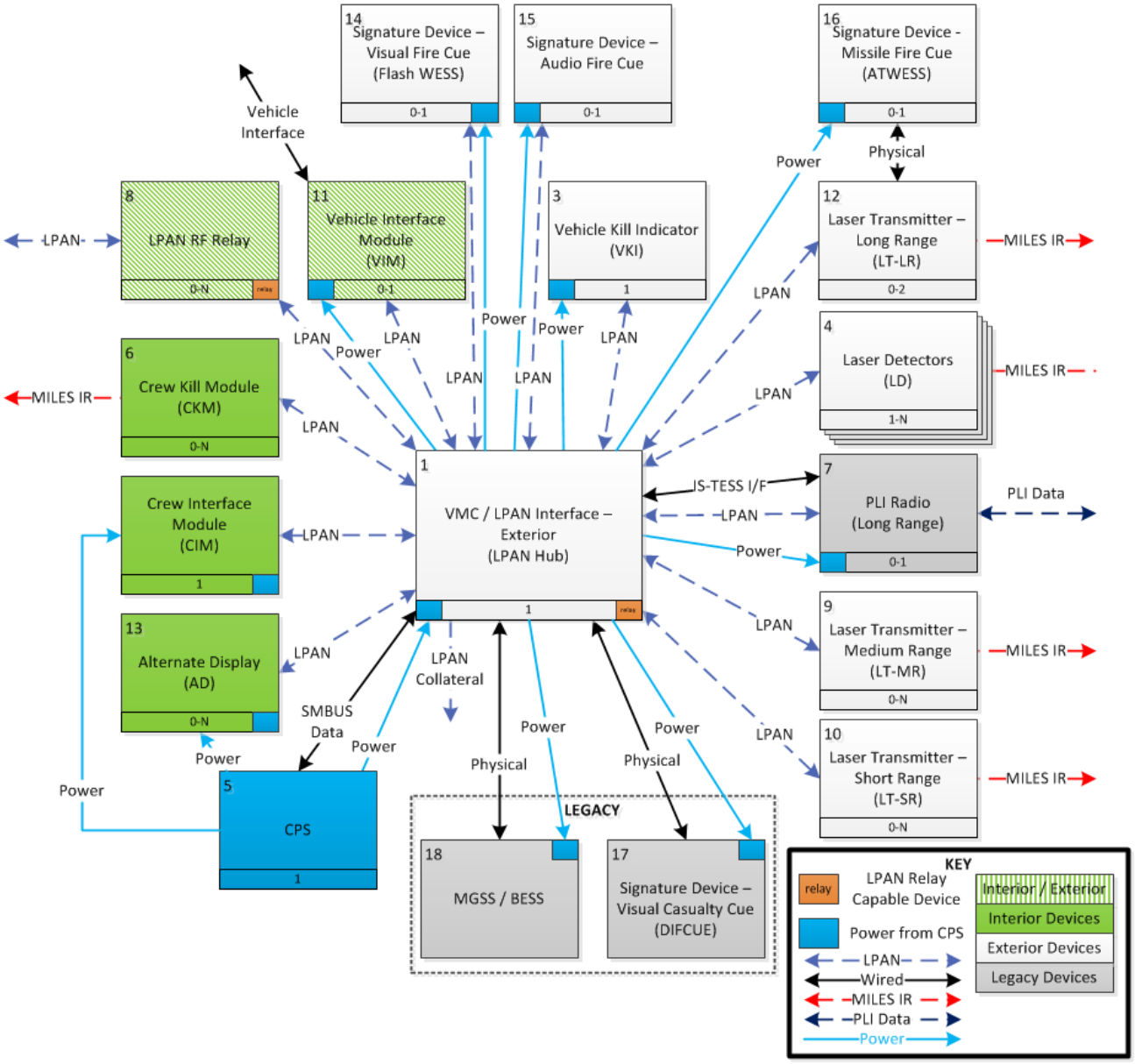

Figure 1 - LT2 TESS Component Architectrue

1.3 LT2 TESS Component Architecture Functional Configuration Diagrams

Figure 2, Figure 3 and Figure 4 illustrate various configurations. The foundation components include the Common Power Supply, the Master Controller and the Hubs. Each foundation component has uniquely sized and keyed connectors with cabling to simplify supportability and installation that precludes inadvertent connections.

1.3.1 Base Configuration

The Base Configuration is the foundation configuration for all instrumented systems. The specific end item TESS components interfaced to the master controller is determined by the specific weapon system and Homestation, Combat Training Center, or Digitized Range use cases. Configuration specific software loads will be enabled in the Master Controller during the set-up and configuration process. Figure 2 connector colors are for illustration purposes only to show that they are discernibly unique and keyed to preclude improper connections.

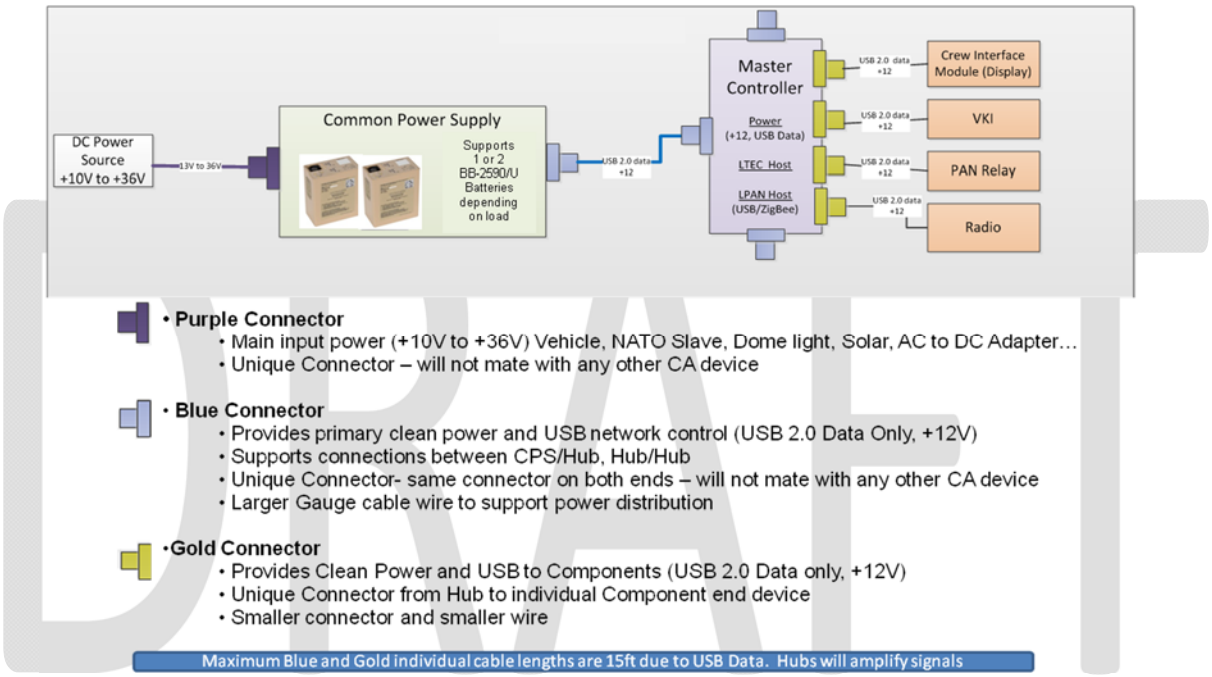

Figure 2 - Base Configruation

1.3.2 Turret Mounted Configuration

The following Turret Mounted Configuration illustration is for combat vehicles. Smaller vehicles with a turret copula may be oriented differently to best support the specific installation configuration. The TESS component devices illustrated are representative and will be platform specific. Future combat weapon systems may provide the signal and power through hull lines via the tactical weapons platform slip ring and internal training connectors. If and when this becomes available it would provide an embedded means of enabling outside to inside instrumentation connectivity.

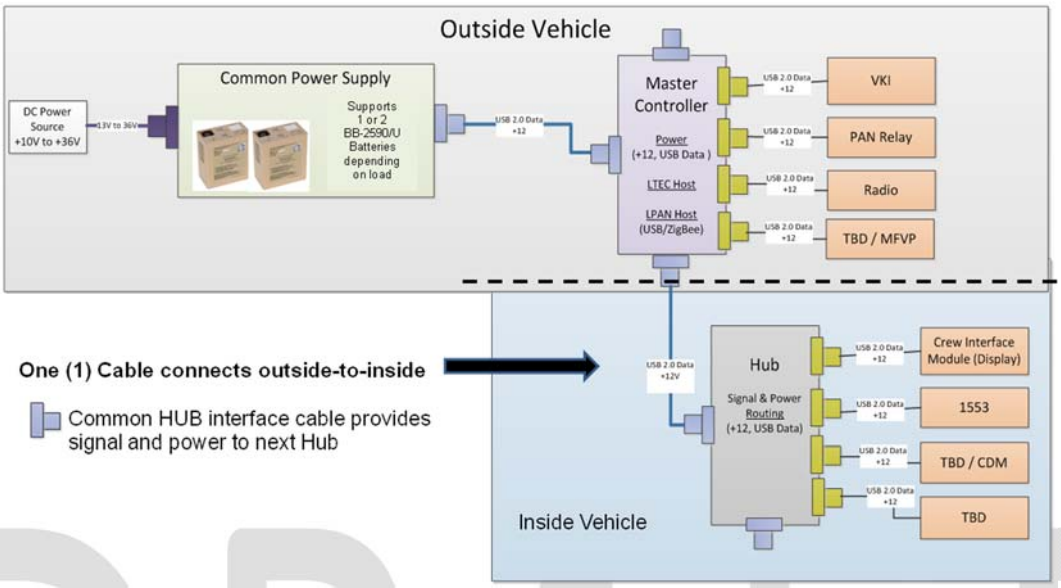

Figure 3 - Turret Mounted Configuration

1.3.3 Legacy Hub Configuration

The Legacy Hub Configuration enables existing Battle Field Effects (BFE) devices to join the network and be controlled and monitored by the Master Controller. The Legacy Hub will be unique and tailored to provide command and control functionality for existing BFE devices. It is the government's intent, over time, to eliminate the Legacy Hub and have future BFE type devices directly interface to the Master Controller or Hub for power and signal.

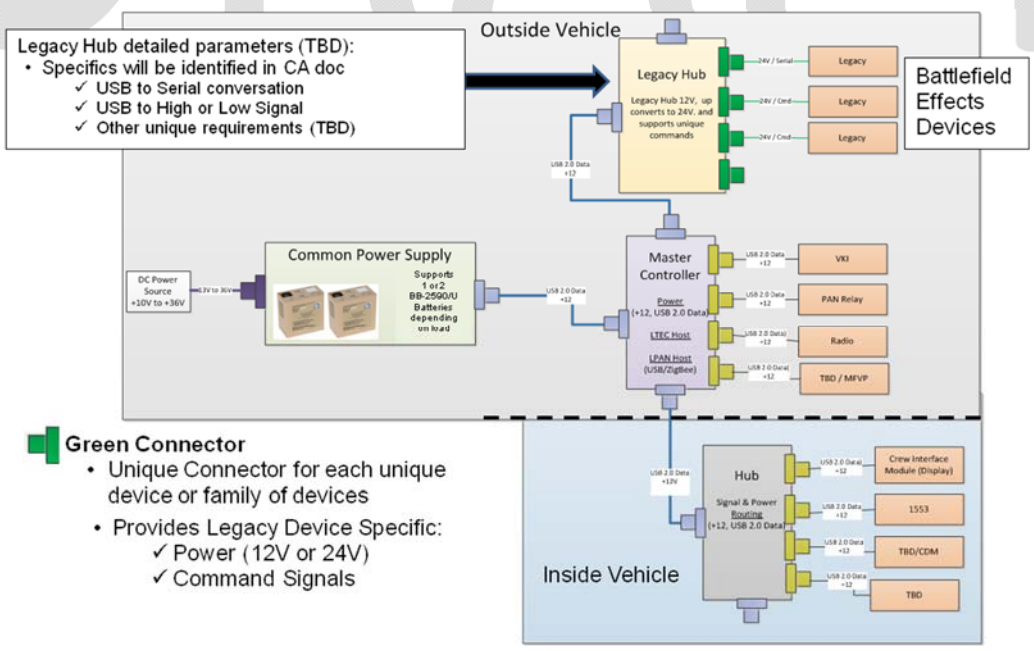

Figure 4 - Legacy Hub

DRAFT

1.4 LT2 TESS LTEC Overview

LTEC will serve as the Vehicle Master Controller software and component interface services manager. This provides the framework to manage current and future component services. A core component within LTEC is the Real Time Casualty Assessment (RTCA) vulnerability tables that provide the probability of hit and kill given a shot from a particular weapon.

LTEC is a Service Oriented Architecture (SOA) that consists of a collection of services that either perform training simulation or communicate with TESS components. These services are supported by a framework that facilitates communication between services.

LTEC services depend on the LTEC framework for service infrastructure, abstraction from the operating system and from communication protocols. The LTEC Framework consists of three subcomponents to provide this function: Service Infrastructure, Operating System Abstraction Layer (OSAL) and Communication Abstraction Layer (CAL).

LTEC provides flexible integration with components so that live training systems with different components specifics will be able to reuse the LTEC Framework and services regardless of platform type or component and that the RTCA tables can be updated and secured. To support the embedment of Live Training, the development and sustainment of LTEC, facilitated by strict architecture and interface management are the keys to ensuring resource required outcomes and reduced support and sustainment costs.

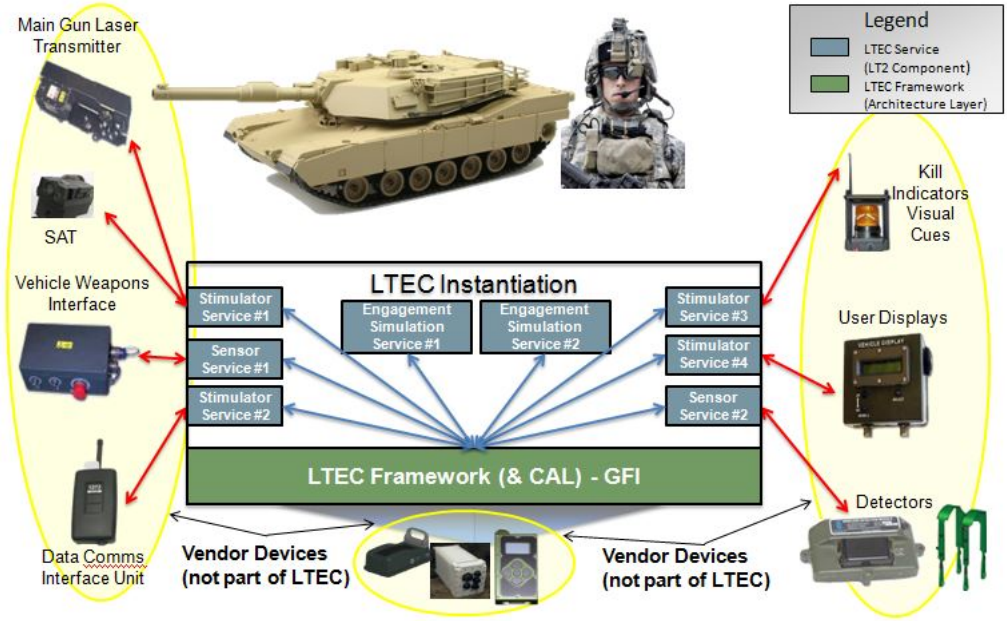

Figure 5 – LTEC Conceptual Illustration

1.5 LT2 TESS LPAN Overview

The LPAN serves as the local TESS instrumentation network. LPAN utilizes commercially proven products to support TESS network and messaging. The standard will define the physical

characteristics, protocols and messages communicated on the LPAN. It provides both the wire (USB data) and wireless (ZigBee) interfaces and messaging structure to enable the individual components to operate as a system. Most components have both wire and wireless to support different operational use cases and weapon platform configurations.

1.5.1 LPAN Wireless Network

The LPAN wireless network will utilize the ZigBee 802.15.4 chip set families that support the implemented standard. ZigBee was selected as the wireless protocol due to a host of reasons but primarily because the commercially ZigBee chipsets automatically manage the lower level networking, MAC, and physical layers. This reduces support and sustainment costs by allowing the user to manage only the upper application (LT2 TESS message) layer. The government does not intend to join the ZigBee federation and will only publish the message sets on the LT2 Portal.

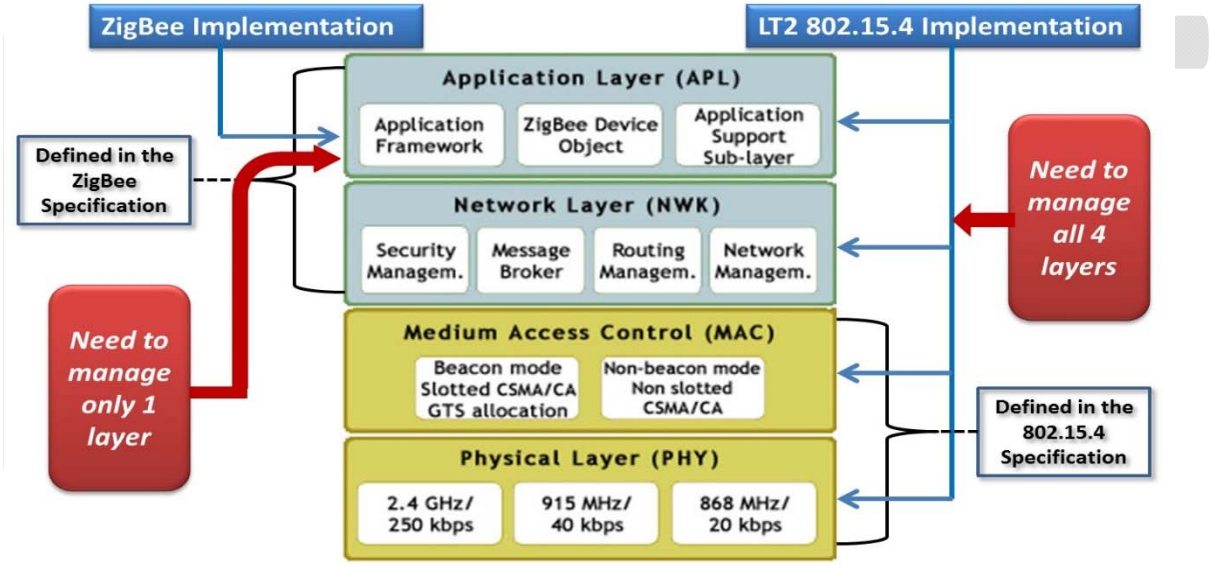

Figure 5 - PAN Stack Management

Key benefits of ZigBee include:

a. The Application Support Sublayer (APS) and ZigBee Device Object (ZDO) layers are application-level layers but are not intended to be required to be modified.

b. By providing the application with callbacks that allow it to keep track of message delivery and network state, the APS, ZDO and Application Framework allow the application to focus on the high level user interaction rather than the lower-level details of managing a network.

c. The ZDO manages network security policies and the security configuration of a device.

d. ZigBee Compliant Platforms provided by the transceiver manufacturer, guarantee interoperability between different 802.15.4 transceivers and different ZigBee software stacks.

e. Lower initial implementation costs, shorter time to market, lower sustainment cost, lower complexity and standardization of network protocol.

f. ZigBee stacks provide a platform on which to build a Live Training application without having to implement any complex software for association, networking, routing or data transmission; it allows the software developer to focus on the application rather than the network protocol implementation.

g. The developer can take full advantage of features of the chipset, such as low-power modes and hardware-included features (e.g. CSMA-CA) without having to implement the low-power strategy or CSMA-CA algorithms themselves; the vendor has already don't so in a way that the chipset was designed to be used.

h. Fewer people required to program, document, implement, test and sustain source code which equals lower touch labor costs.

1.5.2 LPAN Wired Network

The LPAN wired network will define the USB 2.0 data structure and format. Only the USB data lines are used and not typical USB commercial connectors. USB 2.0 chipsets provides benefits for the LT2 TESS application that are not supported newer versions of USB, to include less connector pins, almost two times the cable length (15 feet) between hubs, and data rates that exceed our need (480Mbps). Also provided in the same physical cable will be 12 volts to power the individual components.

1.6 LT2 TESS Common Power Supply (CPS) Overview

The CPS will provide, excluding line loses, 12 volts DC (12.6 VDC to 11.4 VDC) to all components, via a wired interface. It will be supported by up to two BB-2590/U batteries (depending on set-up configuration load demands of the TESS system). The CPS will accept 10 VDC to 36 VDC from an array of sources to include the host platform NATO slave plug, dome lights, solar panels and transformers. The CPS will provide SMBus data to the Master Controller to enable proactive management and sustainment of the CPS and its batteries. Internally the CPS will have self protection measures to provide transient voltage protection, reverse polarity protection, and over voltage/current protection. The CPS will be used across all PM TRADE programs and Product Management offices for powering instrumentation components, communications systems, and standalone use cases for remote instrumentation applications bridges and buildings. The use of a common CPS will eliminate the need for each PM TRADE program to design, procure, and sustain its own unique power supply.

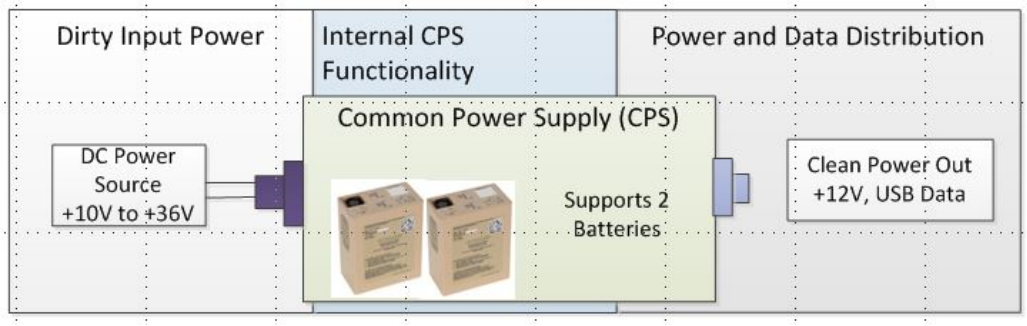

Figure 6 - Common Power Supply Functional Illustration

1.7 HCA Master List

The following table identifies the individual HCA as of this writing. Over time the list will expand to incorporate new component functionalities providing enhanced training capabilities. The list provides the component name, the document number, and network association.

	Component / ICD Name	Document Number	Wire (W) / Wireless (WL)
1	Laser Transmitter - Medium Range		W & WL
2	Laser Transmitter - Long Range (USB)		W & WL
3	Laser Transmitter - Canister Round (USB)		W & WL
4	Laser Transmitter - Universal Control Gun		W & WL
5	Collateral Damage Module		W & WL
6	Laser Detector		W & WL
7	Signature Device – Kill Indicator		W & WL
8	Signature Device – Audio Fire Cue		W
9	Signature Device – Visual Fire Cue (Light)		W
10	Signature Device – Missile Fire Cue (Smoke)		W
11	Vehicle Master Controller		W & WL
12	Dismount Master Controller		W & WL
13	Alternate Display		W & WL
14	LPAN Relay/Hub Device		W & WL
15	Vehicle Interface Module (Multi function vehicle port)		W & WL
16	Vehicle Interface Module (1553)		W
17	Live Player Network (PAN/USB)		Not Applicable
18	Common Power Module		W
19	Family Of Consumable Batteries		Not Applicable
20	Mounting Brackets		Not Applicable
21	Cables		Not Applicable
22	Environmental/EMI/Safety		Not Applicable
23	Software Support Environment		Not Applicable
24	IUID and Serial Number Allocation		Not Applicable
X	Future Component 1…n		W & WL

Table 1 - HCA Master List

1.8 SCA Master List

Since PM TRADE is migrating to a family of components approach to instrumenting weapon systems, soldiers, and fixed objects, individual configuration documents will be required to identify

the unique family composition of components that will be used to instrument that weapon or weapon systems. To support this, System Composition Agreements (SCA) will be implemented to identify which components and software from the entire PM TRADE family of components will be used for that given program or mission instantiation.

	System Composition Agreement (SCA) Name	Document Number
1	Tactical Vehicle System (TVS) - Force-on-Force	
2	Combat Vehicle System (CVS) - Force-on-Force	
3	CVS - Force-on-Target	
4	Infrastructure -IED	
5	Infrastructure -XX	
X	Future Composition 1…n	

Table 2 - SCA Master List

1.9 Component Architecture Modes of Functional Operation Overview

A system, defined in an SCA, comprised of components defined in HCAs, will have four modes of operation:

a. Component set-up and association mode. This mode enables individual components to be associated with other components to instrument a given weapon system or soldier. Associations may be hard (locked) or soft (dynamic) based on the component and its application on the battlefield.

b. Operational mode. This is the mode used during the tactical training exercise to enable force-on-force, force-on-target, or infrastructure configuration to supportcombined arms engagementtraining.

c. Disassociation and reset mode. Used at end of exercise to baseline all components to prepare for storage.

d. Software configuration management update mode. This mode enables software maintenance updates and configuration verification from local or remote locations individually and collectively for like components.

1.10 Pure Fleet – User interfaces: Physical and Operational Consistency

It is imperative that the HCA provide sufficient detail to ensure that future generation of individual component providers have sufficient functional performance detail documented with verification and testing methods to ensure external battlefield performance functionality and internal networking performance functionality. This is critical to ensure overall system functionality when multiple vendors' products are interconnected within the same vehicle configuration.

Equally as important, is user interface and physical commonality to ensure PM TRADE fields a "Pure-Fleet" system of components that is transparent to the soldier, user and installer. From their perspective the HCA must provide the detail and clarity to ensure multiple components developed by different vendors based on the HCA are nearly identical from the top, bottom, sides and ends in

DRAFT

form, fit, function, mounting, orientation, buttonology, displays, color, markings, software interfaces, and Graphical User Interfaces (GUI). The only significant discernible difference to the soldiers and installers should be the company name and serial number on the identifying name plate.

1.11 Logistics and Sustainability

The CA implements a new era of proactive logistics and supportability to include: Technical insertion of new components to enhance Soldier training; BIT with unique component identification will enable proactive maintenance and trend analysis; replacing failed components with new vendor products will enable upgrading through spares; remote software upgrades will reduce shipping items back to vendors; and core base kits will be common across all platforms.

Over time, future acquisitions will field multiple components from multiple vendors. This will require an updated naming and numbering schema to ensure unique identification and serial number of each component across the product line.

To ensure long term logistics tracking unique identifiers, taxonomy must be defined and documented in each HCA. The vision is that no two components (within a component type) would have the same serial number.

DRAFT