Live Training Transformation (LT2)

Component Specification
For The
COMMON POWER SUPPLY (CPS)

Document Number LT2 TESS CPS-001
VERSION 0.0 - 1st Draft

12 January 2015

Distribution A: Approved for public release, distribution is unlimited.

Change history

Version	Change Summary	Release Date

DRAFT

CONTENTS

CHANGE HISTORY **2**

1 SCOPE **5**

1.1 IDENTIFICATION 5

1.2 CPS OVERVIEW 5

1.2.1 CPS Component Agreement Specification *5*

1.2.2 Dependencies *6*

1.2.2.1 CPS Dependencies 6

1.2.2.2 COTS/GOTS Dependencies 6

1.2.2.2.1 Known Limitations 6

1.3 DOCUMENT OVERVIEW 6

2 REFERENCED DOCUMENTS **7**

3 COMMON POWER SUPPLY (CPS) REQUIREMENTS **8**

3.1 COMPONENT REQUIREMENT 8

3.1.1 Input Power Range *8*

3.1.2 Protection Circuitry *8*

3.1.3 Input Connector *8*

3.1.4 Output Connector *8*

3.1.5 Input Voltage Sensing *8*

3.1.6 Output Voltage and USB2.0 Data *9*

3.1.7 CPS operation without Batteries *9*

3.1.8 Internal Batteries *9*

3.1.8.1 CPS Internal Batteries Requirement 9

3.1.8.2 Single Battery Operation 10

3.1.8.3 Battery Replacement 10

3.1.9 USB LTEC Messaging *10*

3.1.9.1 CPS Alarm Notification Error 10

3.1.9.2 CPS Power Up BIT Message 10

3.1.9.3 CPS Logistic Message 11

3.2 COMPONENT CAPABILITY REQUIREMENTS 11

3.2.1 Power Source Family of Cables Requirements *11*

3.2.2 CPS Base Kit *11*

3.2.3 CPS Delta Kit *11*

3.2.4 Maximum Cable Length *11*

DRAFT

3.3 COMPONENT SAFETY REQUIREMENTS 12
3.4 COMPONENT ENVIRONMENT REQUIREMENTS 12
3.5 COMPONENT DESIGN AND CONSTRUCTION CONSTRAINTS 12
3.5.1 Physical Characteristics/Form Factor 12
3.5.1.1 Weight 12
3.5.1.2 Finish 12
3.5.1.3 Color 12
3.5.2 Installation and Removal Requirements 12
3.5.2.1 Interconnecting Cables 12
3.5.3 Construction 12
3.5.3.1 Materials And Parts 12
3.5.3.2 Electromagnetic Environment 12
3.6 OTHER REQUIREMENTS 13
3.7 PACKAGING REQUIREMENTS 13
4 QUALIFICATION PROVISIONS 14
4.1 TEST PROCEDURES 14
5 REQUIREMENTS TRACEABILITY 16
6 NOTES 17
APPENDIX A: TVS PLATFORM CONFIGURATIONS 19
APPENDIX B: MAXIMUM VEHICLE POWER DRAW 20
APPENDIX C: POSSIBLE CONFIGUATION USING CPS 21

DRAFT

1 SCOPE

1.1 Identification

This document describes the Live Training Transformation (LT2) product line composition for interfacing to and charging the Common Power Supply (CPS) for use in providing 12 volt power to LT2 Tactical Engagement Simulation Systems (TESS)across all vehicle and stationary platforms within he PM TRADE LT2 Live TESS portfolio.

1.2 CPS Overview

LT2 TESS components require clean filtered power. The CPS is the component that will provide that clean power to all Component Architecture TESS modules. The CPS module will , when the vehicle is up and running and providing a positive charge, draw a charge from the host platform to maintain a positive charge state in its embedded BB-2590/U batteries(s) and provide filtered 12 volts to the downstream Master Controller, Hubs, and end item LT2 TESS components.

The CPS is managed and communicates with the Master Controller LTEC services via an SMbus to manage command and status messaging, maximum vehicle current draw during charge and other BIT and configuration management information.

1.2.1 CPS Component Agreement Specification

This specification describes the functionality and requirements for the Common Power Supply (CPS). The CPS is the MILES Interface for the system, providing power to Vehicle Master Controller (VMC) which distributes power to the entire system. CPS communicates with VMC using USB2.0 data protocol.

Figure 1 below shows the CPS interfaces.

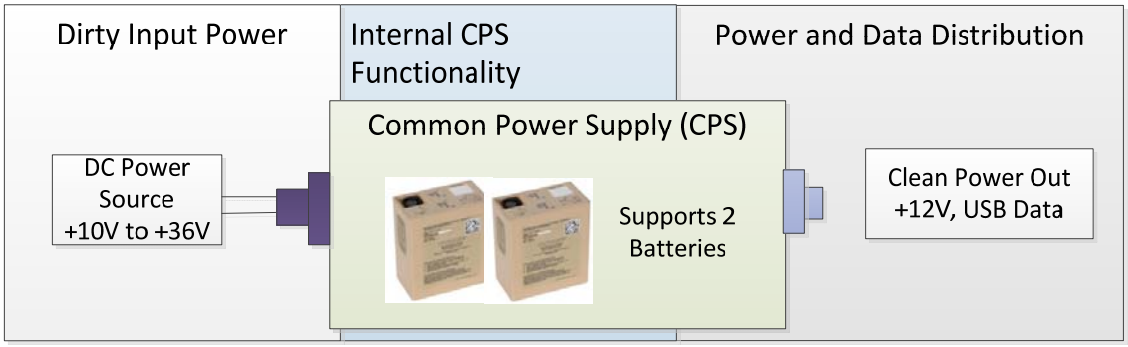

Figure 1: CPS Block Diagram

1.2.2 Dependencies

1.2.2.1 CPS Dependencies

None

1.2.2.2 COTS/GOTS Dependencies

None

1.2.2.2.1 Known Limitations

None

DRAFT

1.3 Document overview

This document specifies the functionality for the Common Power Supply (CPS) as part of the LT2 V-TESS TVS SCA.

This document establishes the baseline for the CPS component and is under configuration control conforming to the LT2 product governance process. Recommendations to improve or alter the baseline must be approved accordingly. All interfaces and interface related software are provided with full government purpose rights and become part of the LT2 product line baseline.

2 REFERENCED DOCUMENTS

Ref. no.	Doc id no.	Rev.	Date	Title
1	PRF-PT-00549	TBD	TBD	Live PAN Standard
2	TBD	TBD	TBD	Family Of Consumable Batteries
3	TBD	TBD	TBD	Environmental/EMI/Safety
4	PMT 90-S002	M	2 FEB 11	Multiple Integrated Laser Engagement System (MILES) Communication Code (MCC) Standard, Rev M
5	21 CFR 1040	TBD	TBD	Code of Federal Regulations, Title 21, Part 1040, Performance Standards for Light-Emitting Products
6	21 CFR 1040.10	TBD	TBD	Code of Federal Regulations, Title 21, Part 1040, Laser Products
7	48 CFR 2.101	TBD	TBD	Definitions of Words and Terms
8	49 CFR 100-185	TBD	TBD	OSHA Hazardous Materials Regulations
9	49 CFR subsection 173.185	TBD	TBD	Lithium batteries and cells
10	TESS-VMC-001	TBD	TBD	Vehicle Master Controller
11	TESS-CIM-001	TBD	TBD	Crew Interface Module
12	TESS-LR2-001	TBD	TBD	LPAN Reuter
13	TESS-LD-001	TBD	TBD	Laser Detector
14	TESS-MRLT-001	TBD	TBD	Medium Range Laser Transmitter
15	PRF-PT-00552	TBD	TBD	LT2 Instrumentation System (IS) TESS ICD

DRAFT

3 Common Power Supply (CPS) Requirements

3.1 Component Requirement

The CPS shall comply with component requirements listed herein.

3.1.1 Input Power Range

The CPS shall be able to handle dirty DC input voltage of +10V to +36V from any vehicles or DC voltage source. The Maximum current draw is based on vehicle type and is provided in Appendix B of this document. LTEC will provide the CPS the maximum current draw based on configuration through the LPAN to USB bus.

3.1.2 Protection Circuitry

The CPS shall have transient voltage protection in accordance with MIL-STD 1275, reverse polarity protection and over voltage/current protection. There shall also be a DC input current monitoring circuit to prevent excessive input charging current.

3.1.3 Input Connector

CPS shall have a single input connector with two pins capable of carrying 6 Amps. *(NOTE: requirement here 6Amps to account for derating. If the maximum we can draw from Tank is 3A then the cabling should be able to handle twice as much, i.e 6Amps*

3.1.4 Output Connector

CPS shall have a single output connector with four pins for Data +, Data-, +12V and +12V_Return. The power pins shall be capable of providing a maximum continuous current draw of 10A.

3.1.5 Input Voltage Sensing

CPS shall have an input voltage sensing scheme to prevent the CPS from depleting vehicle battery below vehicle power start up requirement. CPS detection scheme shall be able to determine if CPS is running off vehicle battery based on input voltage level.

CPS shall be capable of automatically determining the voltage of system it is working on. A 12VDC vehicle will have normal operating voltages of 13-14 VDC and a 24VDC vehicle will have normal operating voltages of 26-28VDC when the engine is running.

DRAFT

CPS shall determine if the vehicle charging system has been turn off when 12VDC vehicle power drops below 12.5VDC or 24VDC vehicle drops below 25VDC.

Table 1: Vehicle Threshold

Vehicle Voltage	Charging Theshold	Engine Running	
+12VDC System	>12.5	13-14VDC	
+24VDC System	>25	26-28VDC	

3.1.6 Output Voltage and USB2.0 Data

The output voltage from CPS to VMC shall be +12V (+/-5%). The voltage drop from longest line, 15Ft, CPS/Hub to end device shall be 0.5V (=10.9V). The +12V power shall be a twisted pair with its return when running power from CPS/Hub to end device.

The USB Data +/- shall use USB 2.0 chipset data which allows for a maximum cable length of 15Ft. USB Data +/- shall be a twisted pair in the cable assembly from CPS to VMC.

3.1.7 CPS operation without Batteries

In the event that both batteries die, CPS shall operate off vehicle power if the input power is above threshold (12.5V for 12V vehicle, 25.5V for 24V vehicle). CPS shall also operate if no batteries are installed provided the input power is above threshold.

3.1.8 Internal Batteries

CPS shall support two BB-2590/U (293Watt hour version) batteries capable of 100 hours of operation based on worse system power consumption configuration. CPS shall be capable of operation with either 1 or 2 batteries installed. CPS shall operate without disruption if one of the two batteries isn't functional or out of charge. CPS shall secure the individual batteries from movement and damage.

3.1.8.1 CPS Internal Batteries Requirement

The batteries in CPS shall be

1.) SMBus v1.1 smart battery technology compliant,
2.) Immersion compliant per MIL-STD-810G (section 512.5)
3.) Design, tested and manufactured to MIL-PRF-32383, MIL-PRF-32383/3
4.) EMI compliant per MIL-STD-461F.

DRAFT

5.) CPS shall support smart battery charging circuit level 2.

3.1.8.2 Single Battery Operation

CPS shall operate if one battery in the CPS dies and operate off vehicle power if both batteries die. At a minimum CPS shall operate with one battery installed.

3.1.8.3 Battery Replacement

Mechanical design of CPS batteries compartment shall allow user to replace the batteries in ten minutes or less without the use of special tools.

3.1.9 SMBus Messaging

The CPS shall implement SMBus and provide performance, and logistical data and state data to the Vehicle Master Controller (VMC) LTEC via LPAN USB data line to support initial configuration/installation, operation, proactive maintenance during exercises, and trend analysis data.

3.1.10 USB LTEC Messaging

CPS shall be capable of supporting LPAN/LTEC messaging with Vehicle Master Controller (VMC) via USB data line.

3.1.10.1 CPS Alarm Notification Error

CPS shall push an Alarm Notification Error message reporting:

1.) Battery below a certain level
2.) Over temp event
3.) Mode switching whether internal or external
4.) Battery end of life flag.

3.1.10.2 CPS Power Up BIT Message

VMC shall request CPS BIT Message for information on CPS:

1.) Operating status – Go/No Go
2.) CPS charging state – Go/No Go
3.) End of useful life message –Replace battery
4.) Low charge level.

DRAFT

3.1.10.3 CPS Logistic Message

VMC shall request CPS Logistic Message for information on:

1.) Serial Number
2.) Cycle Status
3.) End of Life
4.) Over temp
5.) Number of charging cycle.

Table 2: CPS LPAN/LTEC Messaging

Cluster Name	Acronym	Cluster ID	CPS
CPS Alarm Notification Error	CPSANE	??	X
CPS BIT Message	CPSBIT	??	X
CPS Logistic Message	CPSLOG	??	X

DRAFT

3.2 Component Capability Requirements

3.2.1 Power Source Family of Cables Requirements

CPS shall have various input power interface cables for the many different power source platforms. The power source can come from vehicle dome light, NATO slave plug, Battery direct, commercial trucks and possibly solar panels provide the power source met Input Power Range requirement 3.1.1.

3.2.2 CPS Base Kit

CPS Base Kit shall consist of a NATO slave plug harness that mates to CPS input connector.

3.2.3 CPS Delta Kit

CPS Delta Kit, if required, shall include a power cable with the necessary vehicle connector variants for a specific vehicle type that will mate to CPS input connector.

3.2.4 Maximum Cable Length

CPS maximum cable length shall be limited to 15 feet.

3.3 Component Safety Requirements

CPS shall meet all safety requirements per PMT ENV/EMI Standard.

3.4 Component Environment Requirements

CPS shall meet all ENV requirements per PMT ENV/EMI Standard.

3.5 Component Design and Construction Constraints

3.5.1 Physical Characteristics/Form Factor

TBD

3.5.1.1 Weight

TBD

3.5.1.2 Finish

TBD

3.5.1.3 Color

TBD

3.5.2 Installation and Removal Requirements

3.5.2.1 Interconnecting Cables

TBD

3.5.3 Construction

3.5.3.1 Materials And Parts

3.5.3.2 Electromagnetic Environment

CPS shall meet all EMI requirements per PMT ENV/EMI Standard.

DRAFT

3.6 Other Requirements

N/A

3.7 Packaging Requirements

N/A.

DRAFT

4 QUALIFICATION PROVISIONS

The qualification methods used in this document are identified as follows:

EXAMINATION (E) Examination is an element of inspection consisting of investigation, without the use of special laboratory appliances or procedures, of supplies and services to determine conformance to those specified requirements that can be determined by such investigations. Examination is generally nondestructive and includes, but is not limited to, the use of sight, hearing, smell, touch, and taste; simple physical manipulation; mechanical and electrical gauging and measurement; and other forms of investigation.

TEST (T) The operation of the system, or part of the system, using instrumentation or other special test equipment to collect data for later analysis.

DEMONSTRATION (D) The operation of the system, or part of the system, that relies on observable functional operation not requiring the use of instrumentation or subsequent analysis.

INSPECTION (I) Visual inspection of system components, documentation, etc.

ANALYSIS (A) The processing of accumulated data obtained from other qualification methods. Examples are reduction, interpolation, or extrapolation of test results.

CERTIFICATION (C) Certification is an element of inspection to verify that the requirement has been met. Certifications must include documented test results, performance data, analytical data, or vender documentation. The certifications must be made available to Government representatives immediately upon request for review during inspections.

The qualification methods have been annotated in Section 3.

4.1 Test Procedures

N/A

DRAFT

PROCEDURE:

STEP	ACTION	EXPECTED RESULT
1.	TBD	TBD
2.	TBD	TBD

DRAFT

5 REQUIREMENTS TRACEABILITY

The requirements traceability has been annotated in Section 3. Each composition requirement is traced to the LT2 product component(s) that meet that requirement.

DRAFT

6 NOTES

AAR	After Action Review
ATWESS	Anti-Tank Weapon Signature Simulator
AU	Audio Unit
BIT	Built in test
BLUEFOR	Blue Force
CDRL	Contract Data Requirements List
CGUN	Controller Gun
CIM	Crew Interface Module
CKM	Crew Kill Module
CLT	Canister Laser Transmitter
CM	Control Module
CONUS	Contiguous United States
CVTESS	Combat Vehicle Tactical Engagement Simulation System
DCIU	Data Communication Interface Unit
DIFCUE	Direct/Indirect Fire Cue
FOF	Force on Force
GFE	Government Furnished Equipment
GFI	Government Furnished Information
I-MILES	Instrumentable Multiple Integrated Laser Engagement System
IWS	Individual Weapon System
LD	Laser Detector
LEAR	Lethality Effects Assessment Routine
LR2	LPAN RF Relay
LRU	Line Replaceable Unit
LT	Laser Transmitter
MGS	Mobile Gun System
MGSS	Main Gun Signature Simulator
MRLT	Medium Range Laser Transmitter

DRAFT

NA	Not Applicable
OCONUS	Outside of Contiguous United States
ODS	Operation Desert Storm
OPFOR	Opposing force
PDD	Personnel Detection Device
PEO STRI	Program Executive Office for Simulation, Training, & Instrumentation
PID	Player identification
PK	Probability of Kill
QTS	Qualification Test Specification
SAT	Small Arms Transmitter
TDTD	Training Data Transfer Device
TIM	Target Interface Module
TPS	Turret Position Sensor
TVS	Tactical Vehicle System
VIM	Vehicle Interface Module
VKI	Vehicle Kill Indicator
VM	Verification Method
VMC	Vehicle Master Controller
WDU	Wireless Detector Unit
WITS	Wireless Independent Target System

DRAFT

APPENDIX A: TVS PLATFORM CONFIGURATIONS

List of vehicles supported by the TVS SCA.

COB-V-L
COB-V-M
COB-V-H
COB-V-T
ACE M9
MRAP M-ATV
MRAP CAT I
MRAP CAT II
MRAP CAT III
ASV M1117
FMTV
HEMTT
HMMWV-L
HMMWV-Armored

Stryker
APC M113
Cement Bridge
Dozer
Loader MW24C
AVLB
TRK M939
HET
How M109A6
Hvy Rec M88
BRDM
BMD
Bld Plywood

DRAFT

APPENDIX B: MAXIMUM VEHICLE POWER DRAW

Vehicle Description	Nominal Voltage	Maximum Current	Applicable Notes
M1A1 **M1A1 AIM/** **M1A1 AIM SA** **M1A1 FEP**	**28 VDC**	**2,065 ma**	**Max. current includes current drawn from kill indicator, and Main Gun laser firing**
M1A2 SEP V1 **M1A2 SEP V2**	**28 VDC**	**2,065 ma**	**Max. current includes current drawn from kill indicator, and Main Gun laser firing**
M2 A2 **M2A2 ODS** **M2A2 ODS-E** **M3 A2** **M3A2 ODS** **M7 ODS** **OSV** **OSTV**	**28 VDC**	**3,000 ma**	**Max. current includes current drawn from kill indicator, Main Gun laser firing ,and Flash/Aural WESS activation**
M2 A2 ODS SA **M2 A3** **M3 A3** **M7 A3 B-FIST**	**28 VDC**	**3,000 ma**	**Max. current includes current drawn from kill indicator, Main Gun laser firing, and Flash/Aural WESS activation.**

DRAFT

APPENDIX C: POSSIBLE CONFIGUATION USING CPS

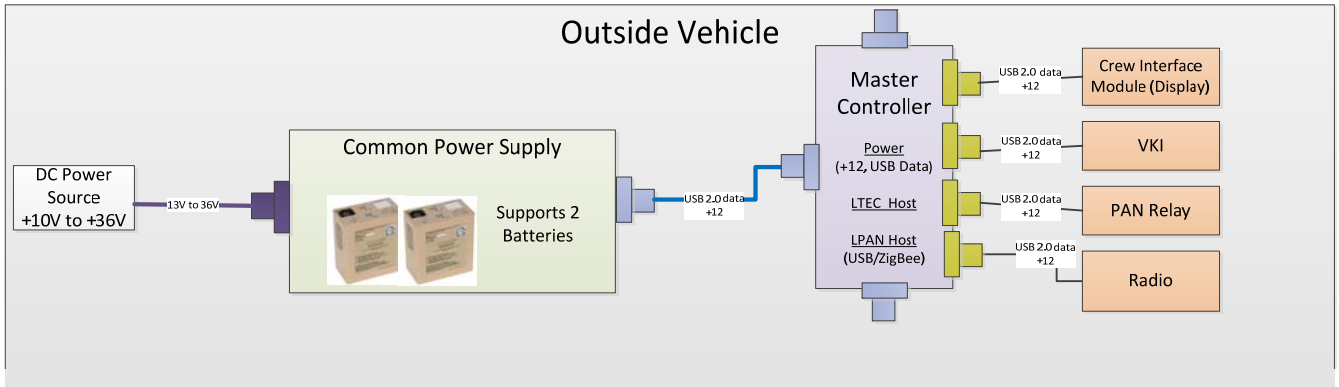

Base Configuration Power Budge Per Device:

Power Source*	Voltage (V)	Current (A)	Power Consumption Device	Voltage (V)	Max Current Draw(A)	Comments
VMC	+12V	10A	Crew Interface Module	+12V	1	
			VKI	+12V	1	
			PAN Relay	+12V	1	
			Radio	+12V	1	
Total					4	

Figure 2: Base Configuration (no Turret)

DRAFT

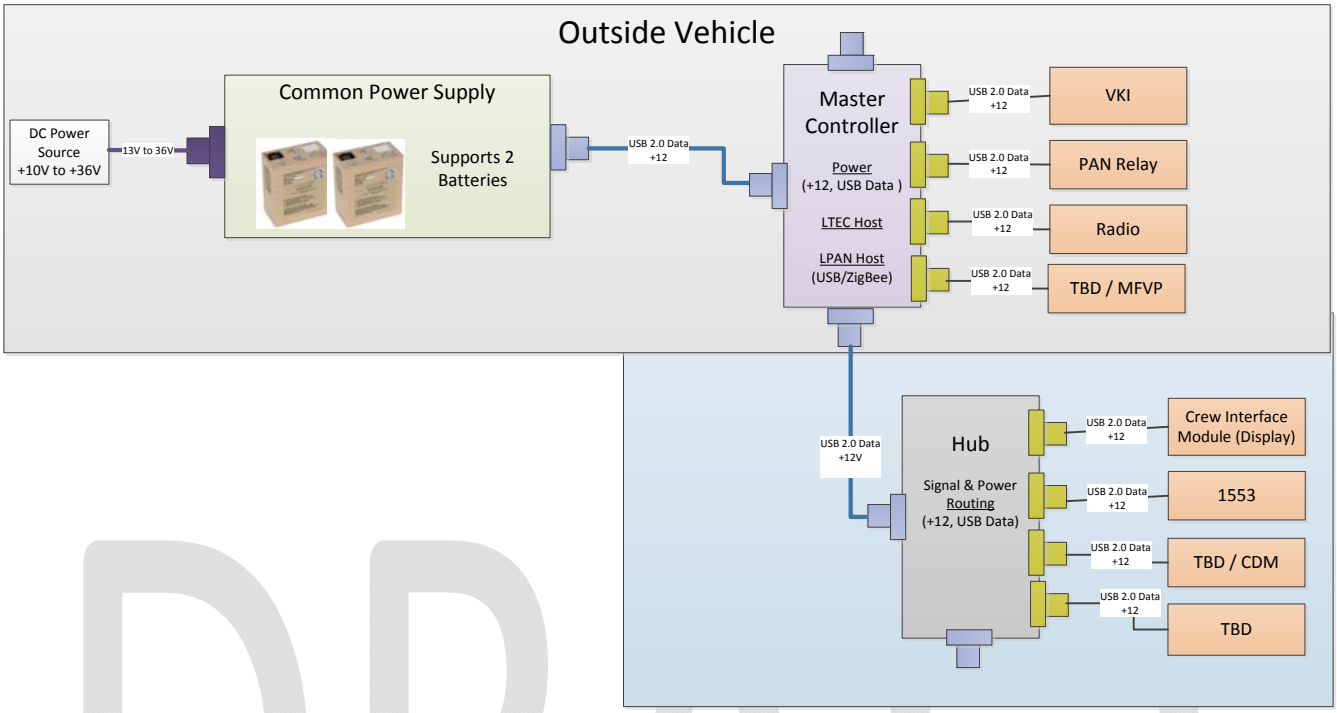

Turret Mounted Configuration Power Budge Per Device:

Power Source*	Voltage (V)	Current (A)	Power Consumption Device	Voltage (V)	Max Current Draw(A)	Comments
VMC	+12V	10A	MFVP	+12V	1	
			VKI	+12V	1	
			PAN Relay	+12V	1	
			Radio	+12V	1	
			Hub*	+12V	4	
Total					8	
Hub*	+12V	4A	Crew Interface Module(Disp)	+12V	1	
			1553	+12V	1	
			TBD/CMD	+12V	1	
			TBD	+12V	1	
Total					4	

Figure 3: Turret Mounted Configuration

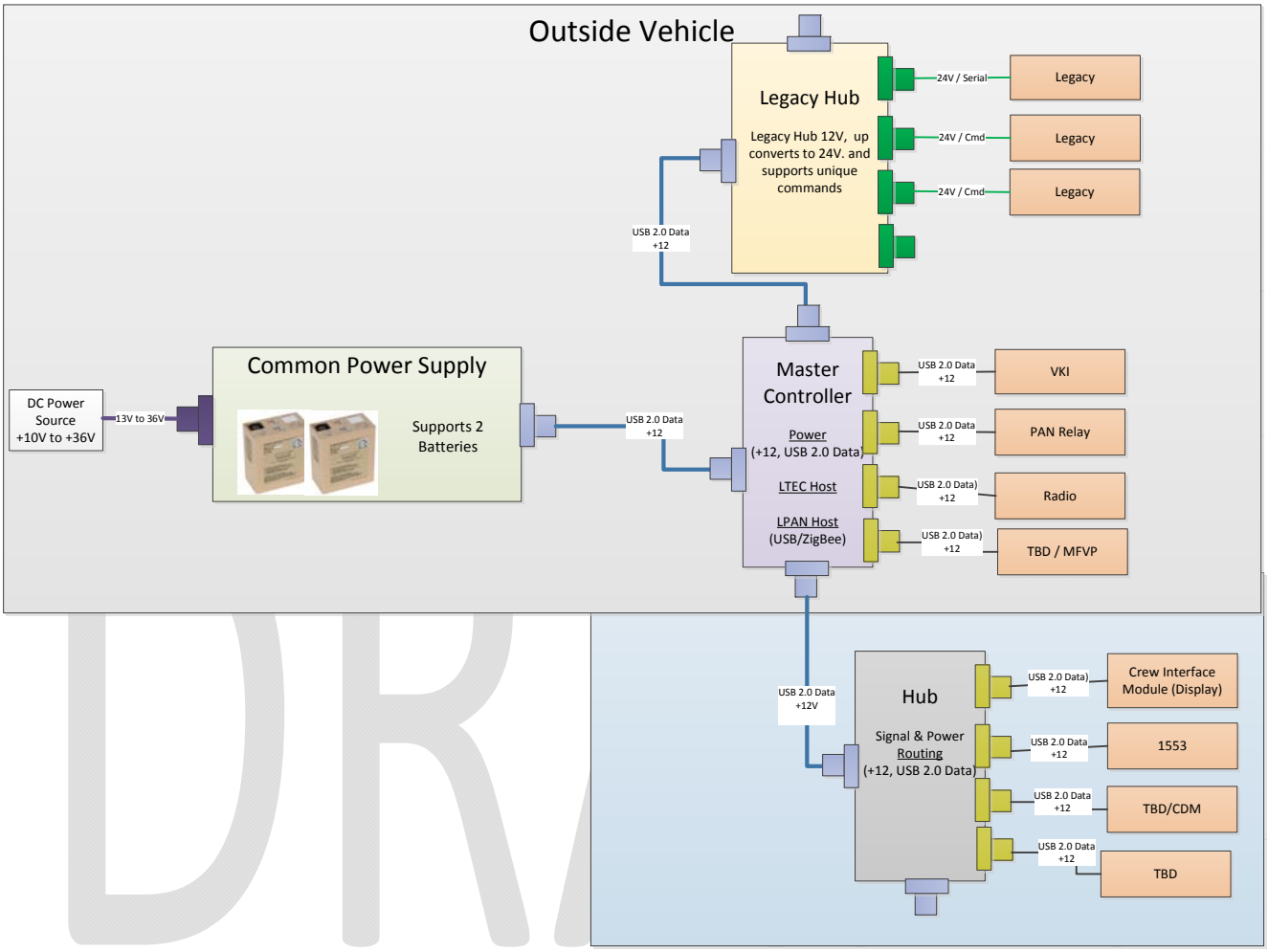
Outside Vehicle
Legacy Hub
Legacy Hub 12V, up converts to 24V. and supports unique commands
24V / Serial
24V / Cmd
24V / Cmd
Legacy
Legacy
Legacy
USB 2.0 Data +12
Common Power Supply
Supports 2 Batteries
DC Power Source +10V to +36V
13V to 36V
USB 2.0 Data +12
Master Controller
Power (+12, USB 2.0 Data)
LTEC Host
LPAN Host (USB/ZigBee)
USB 2.0 Data +12
USB 2.0 Data +12
USB 2.0 Data) +12
USB 2.0 Data) +12
VKI
PAN Relay
Radio
TBD / MFVP
USB 2.0 Data +12V
Hub
Signal & Power Routing (+12, USB 2.0 Data)
USB 2.0 Data) +12
USB 2.0 Data +12
USB 2.0 Data +12
USB 2.0 Data +12
Crew Interface Module (Display)
1553
TBD/CDM
TBD

Unique Legacy Hub Configuration Power Budge Per Device:

Power Source*	Voltage (V)	Current (A)	Power Consumption Device	Voltage (V)	Max Current Draw(A)	Comments
VMC	+12V	10A	MFVP	+12V	1	
			VKI	+12V	1	
			PAN Relay	+12V	1	
			Radio	+12V	1	
			Hub*	+12V	4	
			Legacy Hub*	+12V	2	
Total					10	
Hub*	+12V	4A	Crew Interface Module(Disp)	+12V	1	
			1553	+12V	1	
			TBD/CMD	+12V	1	
			TBD	+12V	1	
Total					4	
Legacy Hub*	+24V	1A	Legacy(TBD)	+24V	TBD	Legacy Hub up converts +12V to +24V.
			Legacy(TBD)	+24V	TBD	
			Legacy(TBD)	+24V	TBD	
Total					1	1A at 24V

Figure 4: Unique Legacy Hub Configuration

DRAFT